Dellonda 13ft Deluxe Steel Swimming Pool with Filter Pump

Model No. DL21

Thank you for purchasing a Dellonda product. Manufactured to a high standard, this product will, if used according to these instructions, and properly maintained, give you years of trouble free performance.

Important Information

Please read these instructions carefully. Note the safe operational requirements, warnings & cautions. Use the product correctly and with care for the purpose for which it is intended. Failure to do so may cause damage and/or personal injury and will invalidate the warranty. Keep these instructions safe for future use.

Refer to instruction manual | No diving | Wear personal flotation devices | Keep children under supervision in the aquatic environment

Contents

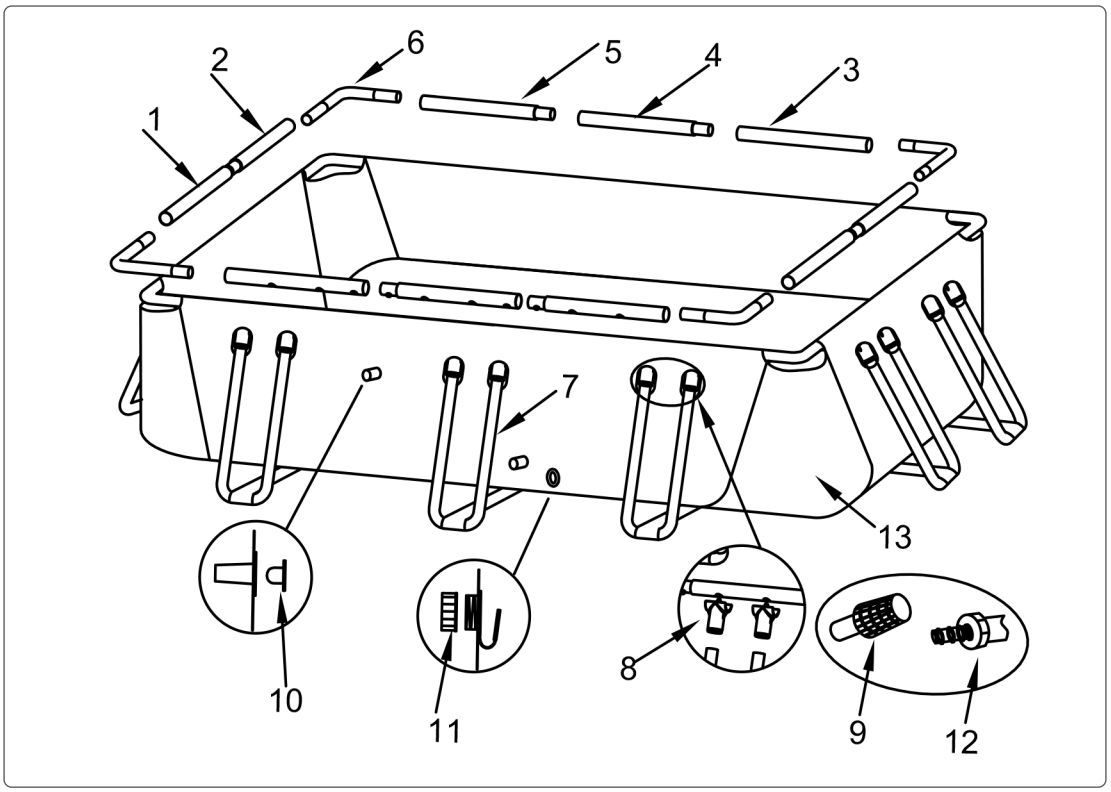

	NAME	QTY
1	Horizontal Beam A	2
2	Horizontal Beam B	2
3	Horizontal Beam C	2
4	Horizontal Beam D	2
5	Horizontal Beam E	2
6	L-Tube	4
7	U-Tube	10
8	T-Joint	20
9	Hole Strainer	2
10	Stopper	2
11	Drainage Valve Cover	1
12	Drainage Valve Connector	1
13	Pool Liner	1
DL10064	Ladder (shown to right)	1

Pool Accessories	
DL42	Top cover
DL46	Ground sheet
DL36 & DL38	Replacement filters

About The Product

Easy to set up with no tools required, this durable above-ground pool features an anti-corrosion steel frame and triple-layered PVC walls for enhanced strength and longevity. The pool measures 4.00m (L) × 2.00m (W) × 0.99m (D), with overall assembled dimensions including support legs of 4.41m (L) × 2.30m (W) and a total floor space requirement of 10.143m². With a water capacity of 7,020 litres (1,854 gallons) at 90% wall height, the pool is supplied complete with a 530gal/hr filter pump, safety ladder and repair kit, providing everything needed to get started.

Safety Instructions

- **ELECTRICAL SAFETY**
- **WARNING! REFER TO AND FULLY COMPLY WITH THE ELECTRICAL AND SAFETY INSTRUCTIONS IN THE ENCLOSED FILTER PUMP MANUAL.**
- **WARNING! The pool must be accessible to a 110 or 230V AC outlet protected by a Ground Fault Circuit Interrupter.**
- **The pool should be set no closer than 2m to the power source, but no further than the length of the filler pump cord. Under no circumstances should an extension cord be used to extend the range of the connection.**
- **GENERAL SAFETY**
- **WARNING! Carefully read, understand, and follow all information in this user manual before installing and using the swimming pool. These warnings, instructions, and safety guidelines address some common risks of water recreation, but they cannot cover all risks and dangers in all cases. Always use caution, common sense, and good judgment when enjoying any water activity. Please read carefully and keep for future reference.**
- **WARNING! The use of a swimming pool implies compliance with the safety instructions described in the operating and maintenance guide. In order to prevent drowning or other serious injuries, pay particular attention to the possibility of unexpected access to the swimming pool by children under 5 by securing the access to it, and, during the bathing period, keep them under constant adult supervision.**
- **Non-swimmers safety**
- Continuous, active, and vigilant supervision of weak swimmers and non-swimmers by a competent adult is required at all times (remembering that children under five are at the highest risk of drowning).
- Designate a competent adult to supervise the pool each time it is being used.
- Weak swimmers or non-swimmers should wear personal protection equipment when using the pool.
- When the pool is not in use, or unsupervised, remove all toys from the swimming pool and its surrounding to avoid attracting children to the pool.
- **Safety devices**
- In order to prevent children from drowning, it is recommended to secure access to the pool with a protection device. It is recommended to install a barrier (and secure all doors and windows, where applicable) to prevent unauthorized access to the swimming pool.
- Fences, safety covers, enclosures or similar safety devices are helpful aids, but they are not substitutes for continuous and competent adult supervision.
- **Safety equipment**
- It is recommended to keep rescue equipment (e.g. a ring buoy) by the pool.
- Keep a working phone and a list of emergency numbers, by the pool.
- **Safe use of the pool**
- Encourage all users especially children to learn how to swim.
- Instruct all pool users, including children, what to do in case of an emergency.
- Never dive into any shallow body of water. This can lead to serious injury or death.
- Encourage all users especially children to learn how to swim.
- Learn Basic Life Support (Cardiopulmonary Resuscitation - **CPR**) and refresh this knowledge regularly. This can make a lifesaving difference in the event of an emergency;
- **DO NOT** use the swimming pool when using alcohol or medication that may impair your ability to safely use the pool.
- When pool covers are used, remove them completely from the water surface before entering the pool.
- Protect pool occupants from water related illnesses by keeping the pool water treated and practicing good hygiene. Consult the water treatment guidelines in the user's manual.
- Store chemicals (e.g. water treatment, cleaning or disinfection products) out of the reach of children.
- Use the signage as outlined on below.

No diving

Wear personal flotation devices

Keep children under supervision in the aquatic environment

- This safety sign must be posted in a prominent visible position within 2 m of the pool. Alternatively you may purchase a vinyl base glue (not included) to glue the sign to the pool wall next to the entry and exit point,assuring it is prominently visible to all users when approaching the pool.
- Removable ladders shall be placed on a horizontal surface. Ladders must not be used for another purpose.
- **WARNING!** a drained pool outdoors may cause unknown hazards.
- **WARNING!** Installation and assembly shall be done by adults.
- **WARNING!** Read and follow the instruction for use and maintenance to ensure a safe use of the swimming-pool kit. Not following the instructions for use and maintenance can cause serious health hazards, in particular for children.
- **WARNING!** Only for domestic outdoor use.
- **WARNING!** Drowning hazard. Children have drowned in portable swimming-pools.
- **WARNING!** Empty the pool when not in use. **DO NOT** leave a pool empty outdoors.
- **WARNING!** Keep children under supervision in the aquatic environment.
- **WARNING!** No diving.

Ladder Safety

- You must place ladder on level, firm ground and the correct way round.
- The ladder must be installed as per the manufacturer's instructions.
- **DO NOT** play on the ladder.
- Only climb on the ladder using footsteps.
- • **DO NOT** use the ladder for any purpose other than that for which it was intended.
- • Make sure ladder is fully assembled according to instructions.
- • **DANGER**! Metal conducts electricity!

- **DO NOT** allow ladder to come in contact with live electrical wires.
- Remove ladder from pool immediately after use. Store ladder .
- **IMPORTANT**: The max load capacity is 150kg
- Always check ladder assembly screws and retention clips for splinters or sharp edges before use.

Site Selection

- **WARNING**! Pools installed on inadequately level surfaces are subject to leaking, forming irregularities, or collapse, which can result in property damage or serious injury for those in or around the pool area!
- **WARNING**! **DO NOT** use sand during setup process. If it appears that there is a need for use of a “levelling agent”, then your set-up site is unsuitable.
- **FAILURE TO OBEY THIS WARNING MAY RESULT IN SERIOUS PERSONAL INJURY**.
- **CAUTION**: Please choose your set-up area carefully, as lawn and other desirable vegetation underneath the ground sheet (if applicable) will die. Furthermore, try to avoid setting the ground cloth (if applicable) in areas prone to aggressive plant and weed species, as they may grow through the ground cloth (if applicable).
- **CAUTION**: The pool must be accessible to a 110 or 230-volt **AC** outlet protected by a Ground Fault Circuit Interrupter (**GFCI**). The pool should be set no closer than 2 m to the power source, but no further than the length of the filter pump cord. Under no circumstances should an extension cord be used to extend the range of the connection.
- It is absolutely essential to select a suitable site for your pool **BEFORE** attempting to fill it with any water. Please select a set-up site which strictly conforms to the following guidelines:
- 1. Ensure that the area is firm, flat (no bumps or mounds of earth) and extremely level, with a grade not exceeding 3° of slope at any point in the set-up area.
- 2. Make sure that the area you have selected to set-up the pool is completely free of sticks, stones, sharp objects or other foreign debris.
- 3. Select an area that is not directly underneath overhead power lines or trees. Additionally, make sure that the pool set-up area does not contain underground utility pipes, lines, or cables of any kind.
- 4. If a ground cloth is provided with your pool kit, its use, is highly recommended. The ground cloth will help protect the pool liner from damage due to weed growth, sharp objects, and debris.
- 5. If at all possible, choose an open location on your property that is exposed to direct sunlight. This will help to warm your pool.

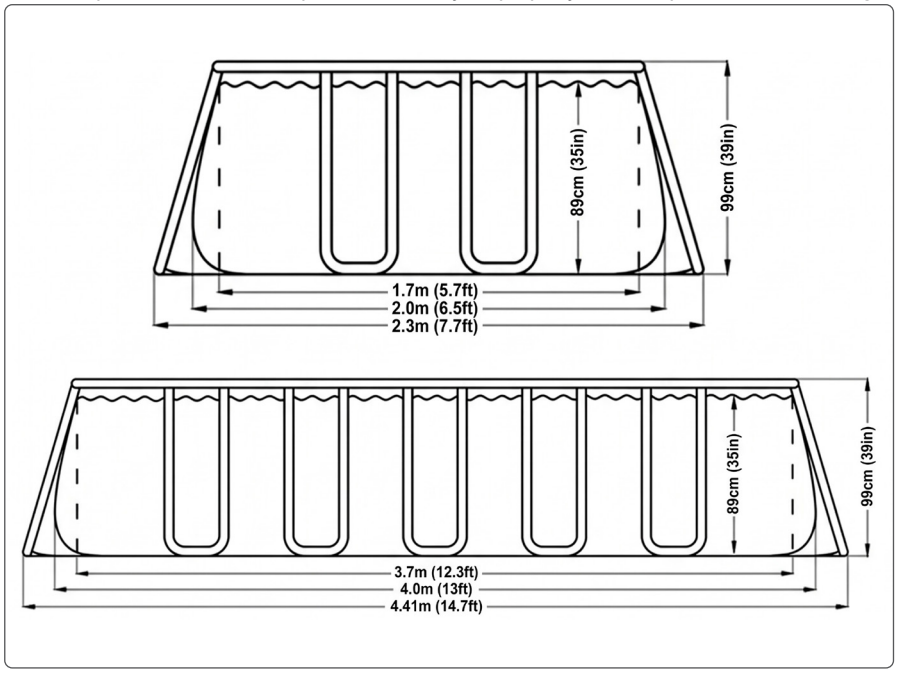

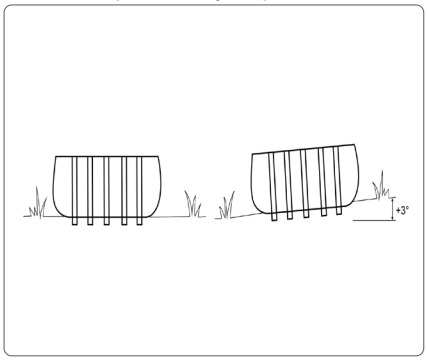

Installation Space Requirement:
Ensure a minimum flat floor area of 4.41m x 2.3m (approx. 9.46m² / 101.8ft²) to accommodate the full pool frame and supports. For safe installation and maintenance access, additional clearance around the pool is recommended..

Pool Setup

- **IMPORTANT**: **DO NOT** start assembly if any pieces are missing. For replacement pieces call the Dellonda Service telephone number.
- The number of adults required for installation: at least 2 adults.
- Total installation time except the time for site preparation and water filling: approximately 60 minutes.
- Step 1. **ACCOUNT FOR ALL PARTS**.
- Remove all the parts from the carton(s) and place them on the ground in the location where they are to be assembled Check each part according to “**CONTENTS PAGE**” make sure all the pieces to be assembled are accounted for.
- Step 2. **INSTALL DRAIN VALVE COVERS AND STOPPER**
- Make sure that the outer drain plug is inserted into the outer drain cap and the drain valve cover is screwed on tightly. Plug the connection holes with the stoppers. (The out drain plug changes according to different size of pool.)

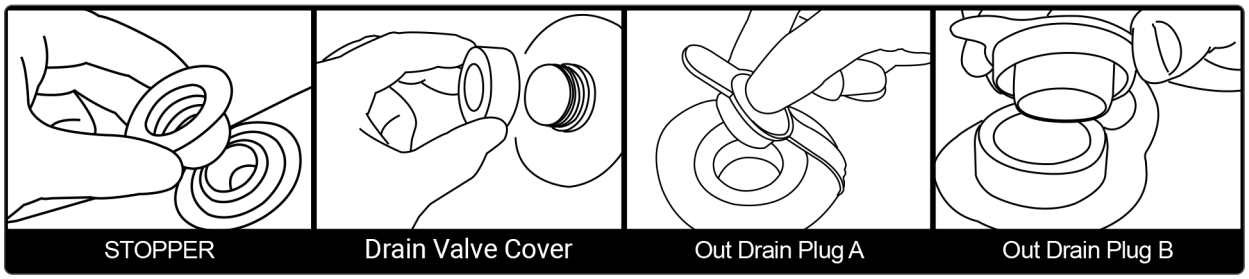

- Step 3. **INSTALL THE U-TUBES**

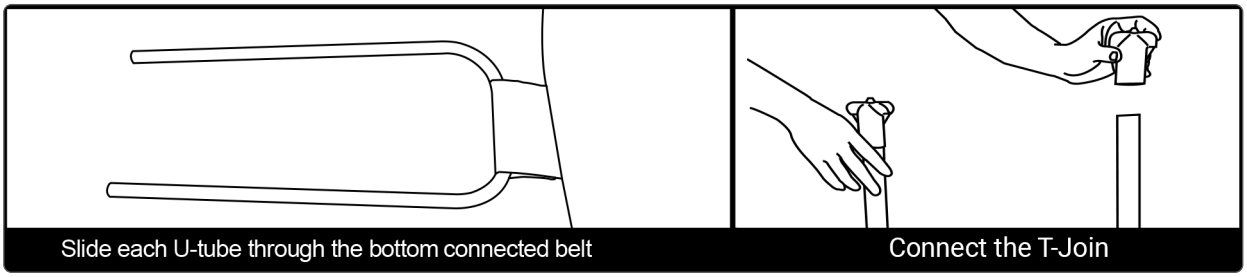

- Step 4. **INSTALL HORIZONTAL BEAM**
- For the long side sleeve of the pool:

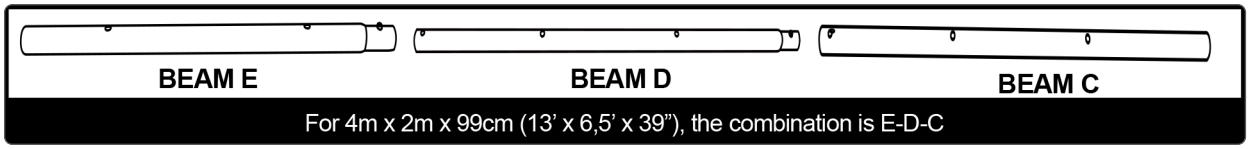

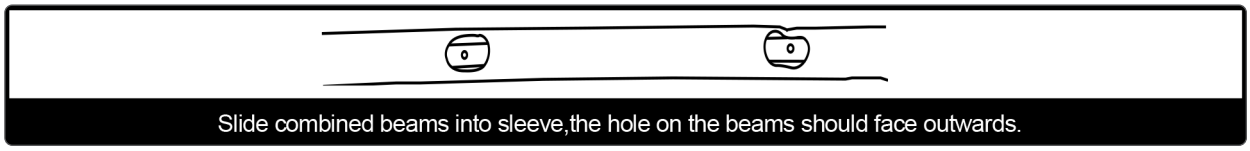

- For the short side sleeve of the pool:

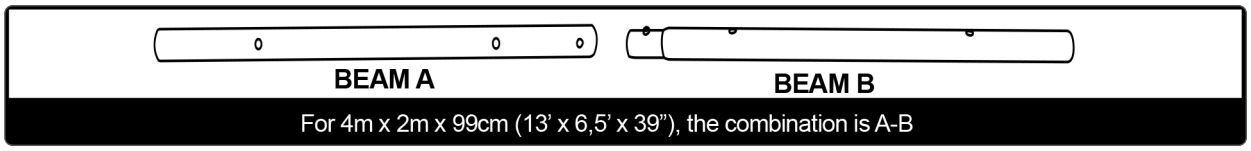

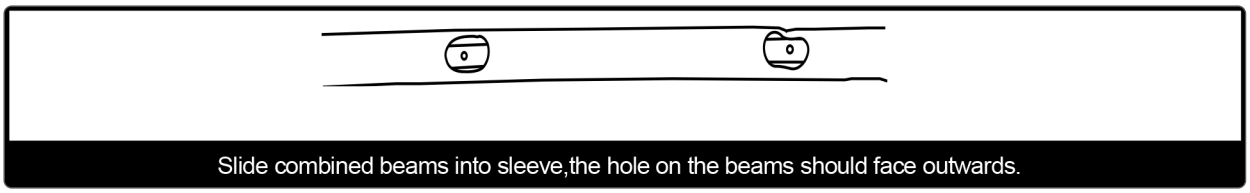

- Step 5. **INSTALL HORIZONTAL BEAM AND L-TUBE**

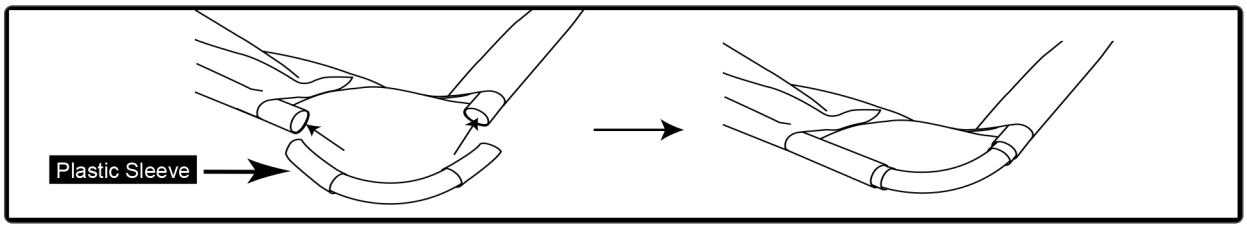

- Step 6. **INSTALL HORIZONTAL BEAM AND U-TUBES**

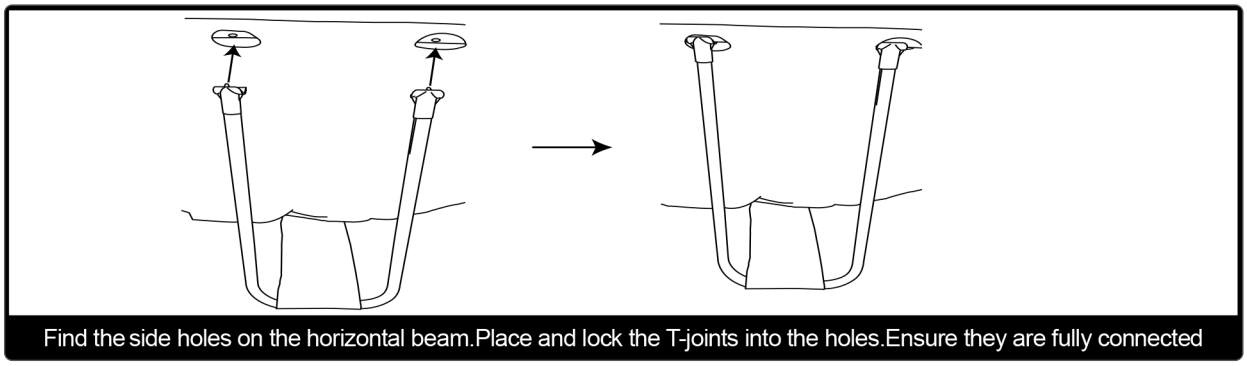

Fill the pool with water

- **WARNING! DO NOT** leave pool unattended while filling with water.
- **WARNING!** If more than 1~2 inches of water collects on any one side before you start filling in the centre, the pool is not level enough, and must be corrected! Pull out the drain plug, release the water completely, disassemble the pool completely, locate the pool on a level surface, repeat set up instruction.
- **WARNING! DO NOT OVERFILL** as this could cause the pool to collapse. In times of heavy rainfall you may need to empty some of the water to ensure the level is correct.
- 1. Make sure the drain fitting is plugged securely and the cap is in place. Start filling the pool with water. After about 1-inch of water is on the bottom, stop filling and smooth wrinkles out of the bottom of the pool. Pull the outer wall out from the top edge, all around the bottom of the pool, so that it fills evenly.
- 2. Continue filling the pool until water level is reached as shown in the below image

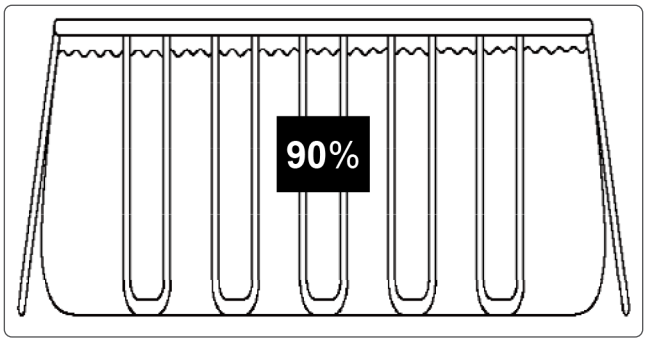

Assembling The Ladder

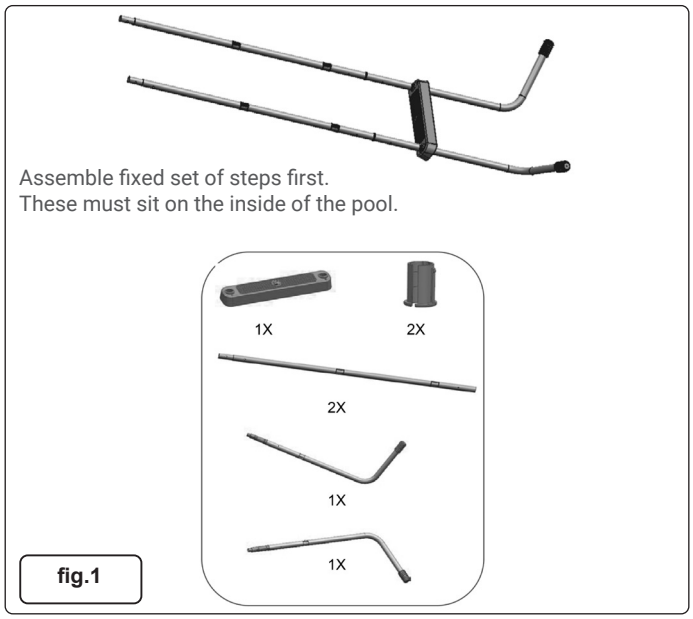

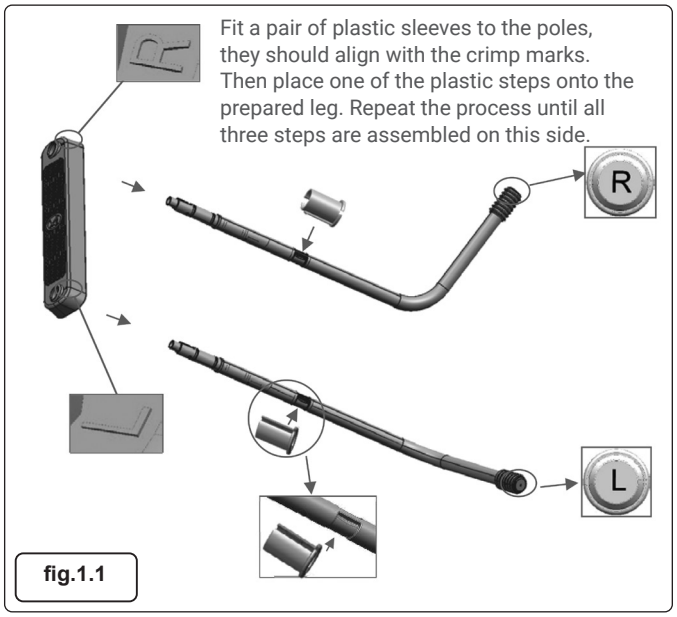

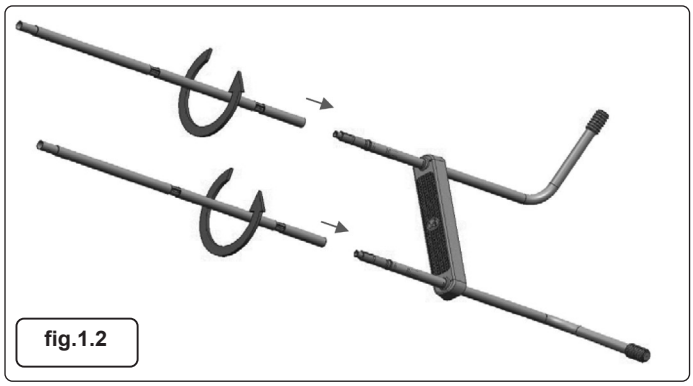

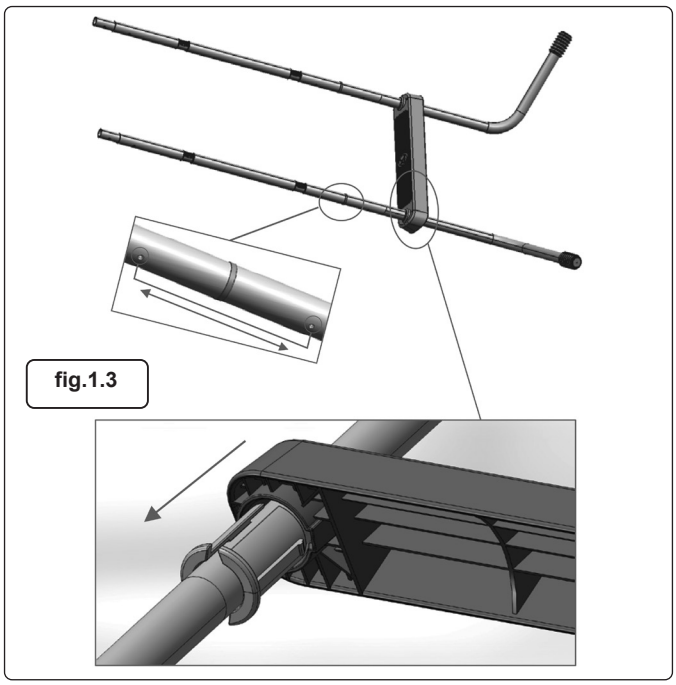

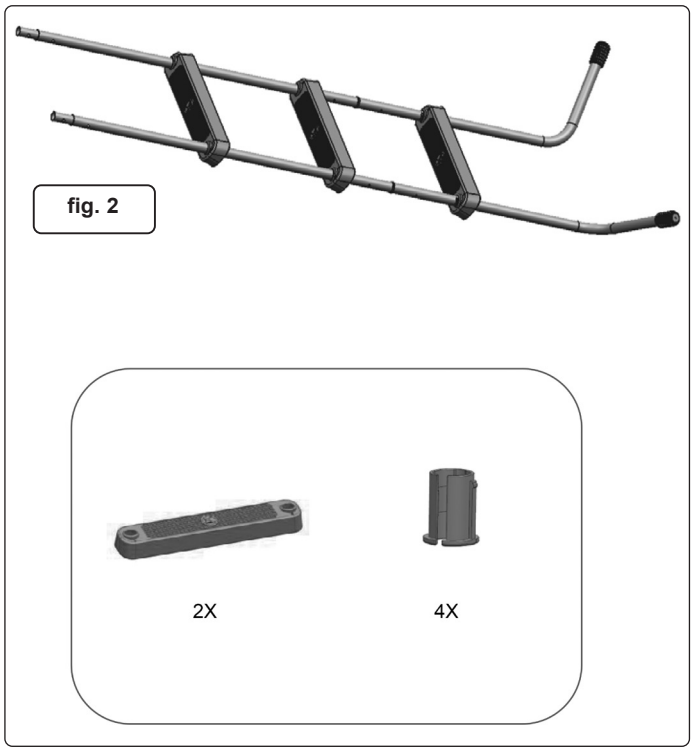

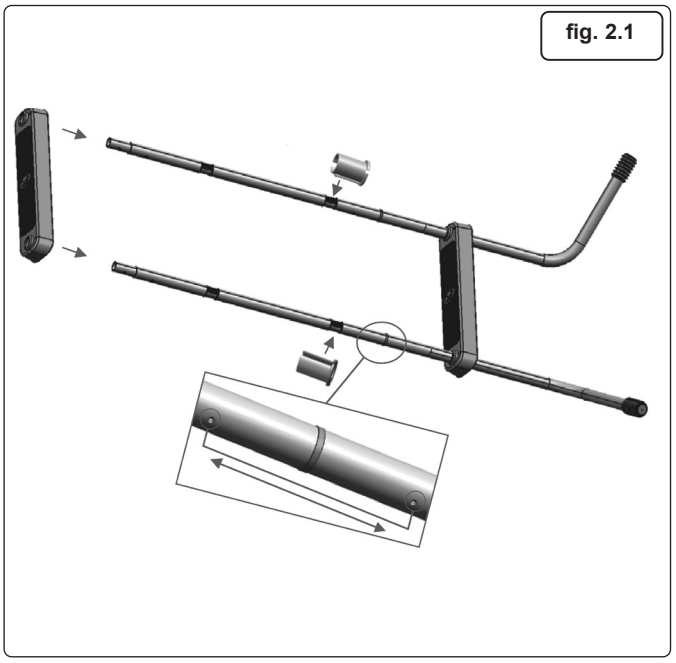

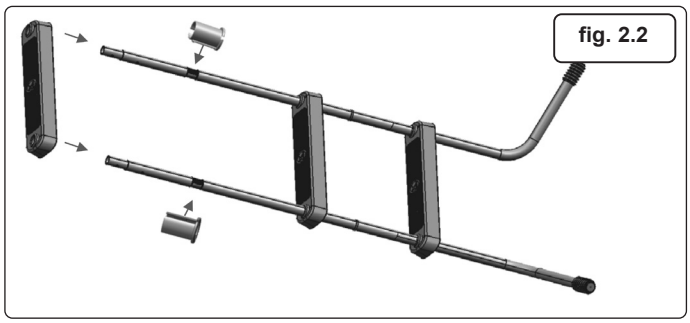

Assemble the other side of the 'A' frame
which **MUST** sit on the **OUTSIDE** of the pool.

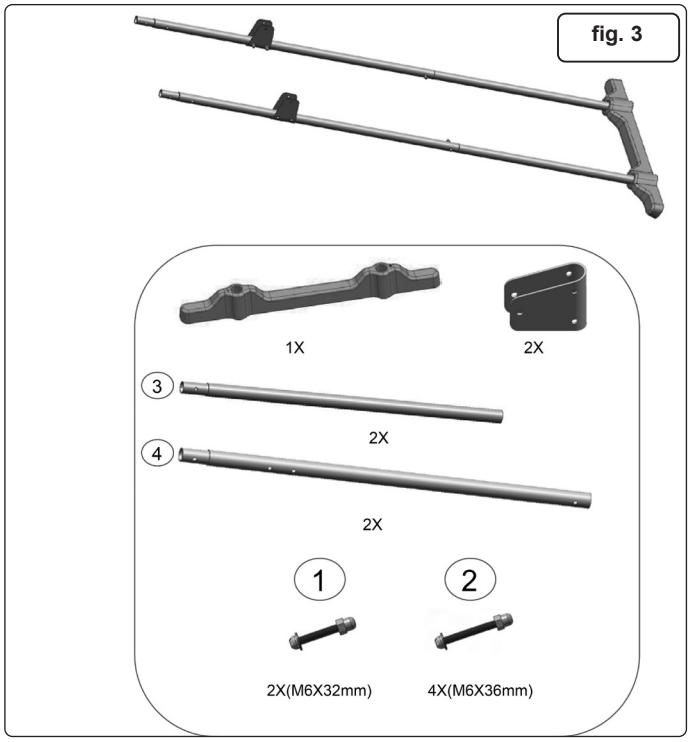

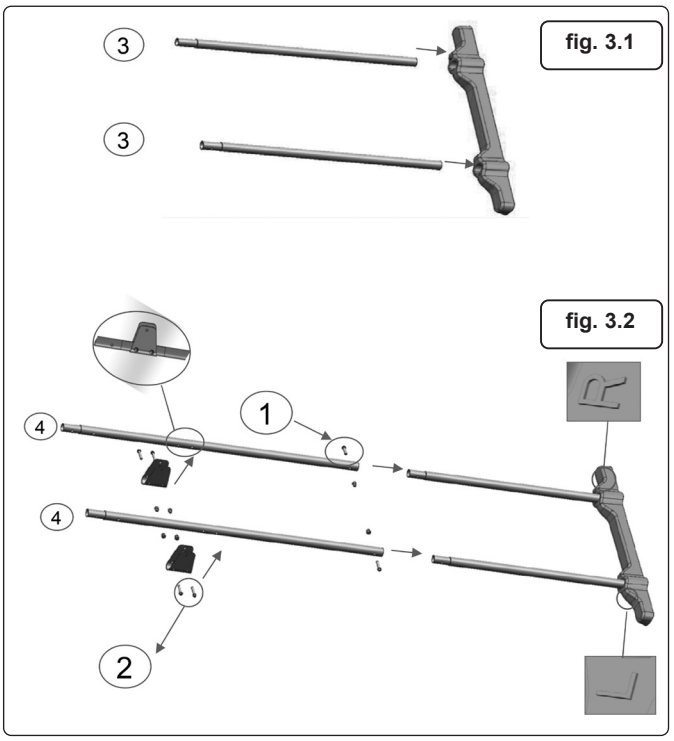

Assemble the fold away steps as per fig.4 below.

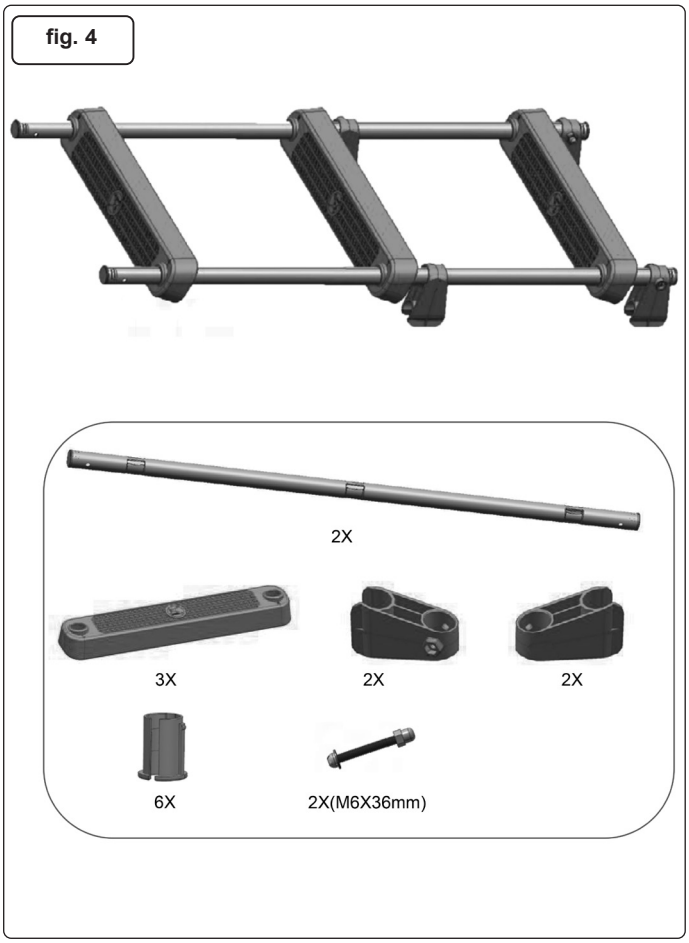

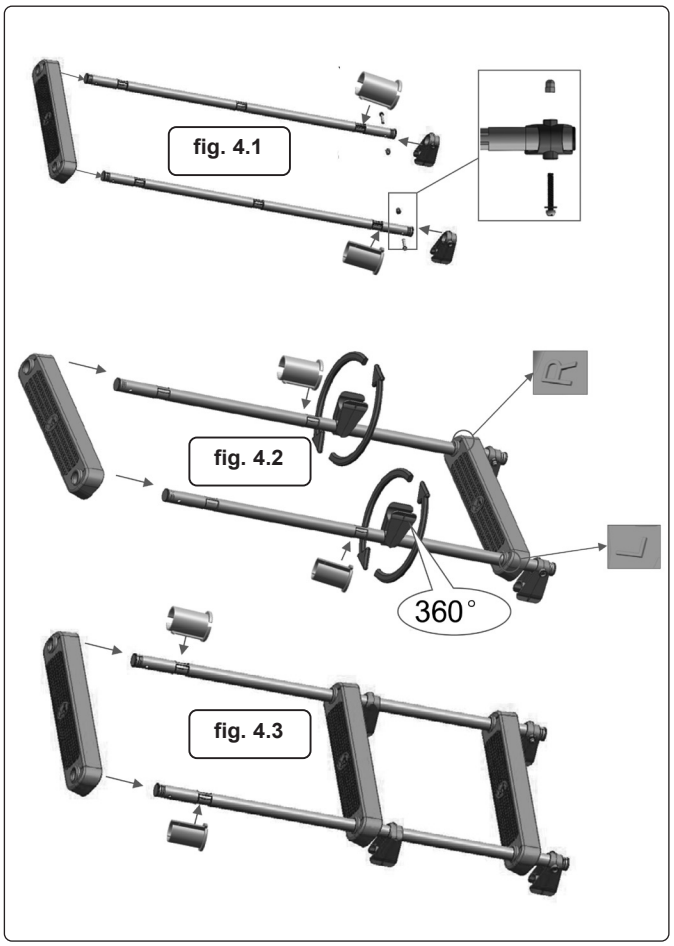

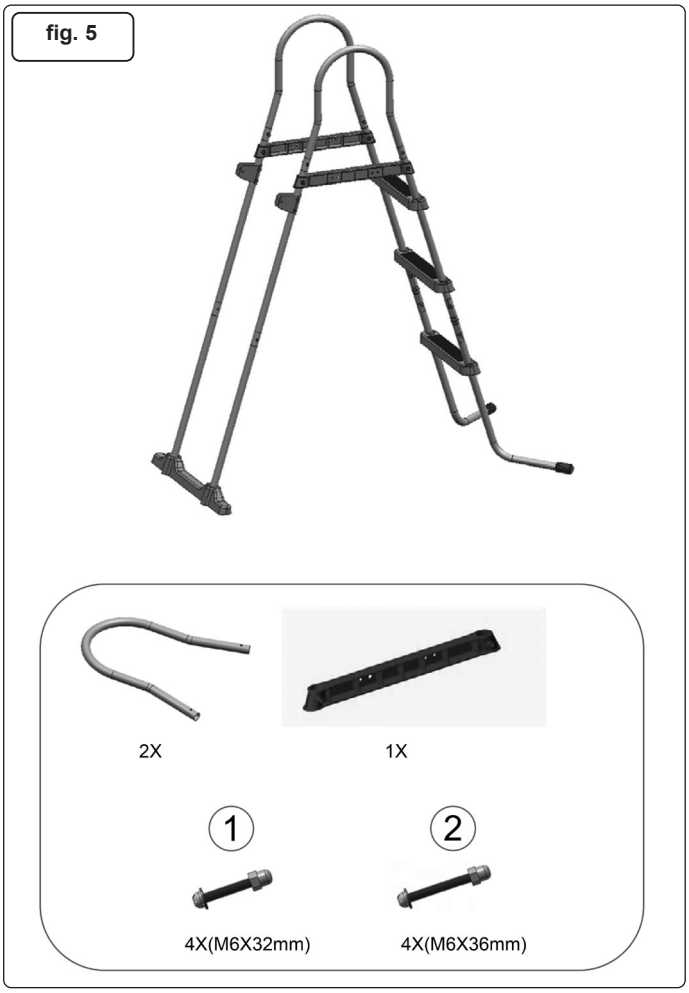

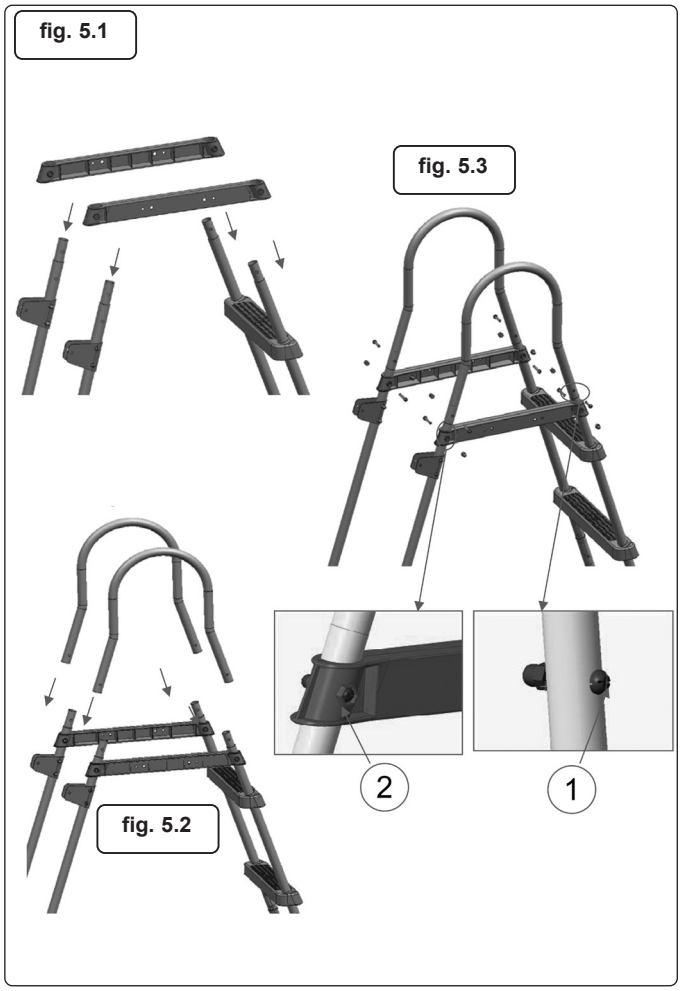

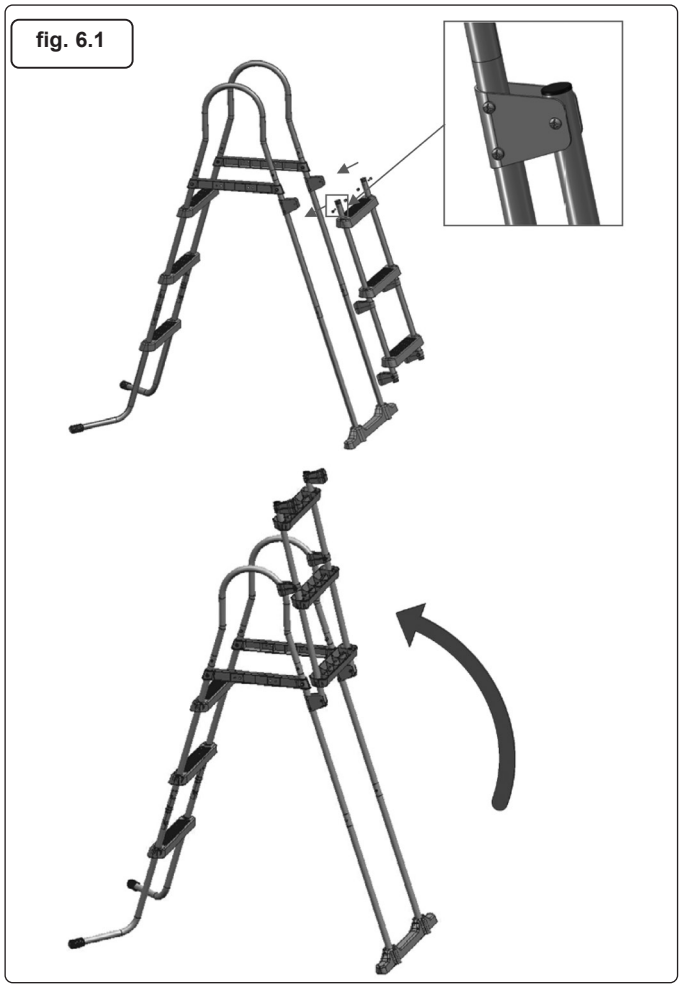

IMPORTANT! When the pool is not in use, the steps must be folded up as per the lower 'raised' image in fig.6.1.This is a safety feature to prevent children accessing the pool.

Winter and Long-Term Storage

- **WARNING**! **DO NOT** let your children stand at outlet and face the water outlet during the drainage. The water current may sweep children away.
- **WARNING**! Pool should be stored in a cool and dry place, with no sharp objects around it, and no heavy objects lying above, which may cause damage to the pool.
- Step 1. If you have a filter pump, make sure that the electricity source to the filter pump has been disconnected.
- Step 2. Check to ensure that the outlet plug is firmly inserted on the inside of the pool.
- Step 3. Attach your garden hose to the drainage valve connector, and placing the other end of the hose in an area where the water can drain safely, such as a storm drain or street gutter. Remember that because water always finds its own level, the end of the hose must be lower in elevation than the pool to ensure complete drainage.
- Step 4. If you have a filter pump, insert the stopper into the inlet and outlet fixtures, on the inside of the pool, and then disconnect the filter pump hoses.
- Step 5. Attach the drainage valve connector to the drain outlet by turning connector in a clockwise direction.
- Step 6. Open the outlet plug on the inside of the pool and the water will begin to drain immediately.
- Step 7. Disconnect the hose and drainage valve connector when finished.
- Step 8. Replace the outlet plug on the inside of the pool.
- Step 9. Be sure that the pool liner is completely dry before folding the pool for long-term storage. Leaving the pool exposed to sunlight for a few hours will clean and speed the drying process and make it easier to fold the pool for storage. (Never attempt to fold or stow a pool that is not completely dry as this could lead to a proliferation of mould or mildew build-up during the time the pool is in storage.)
- Step 10. Remember, proper off-season storage is critical to protect your investment in your pool (especially in winter). Once drained and dry, your pool should be carefully folded and wrapped in a ground cloth (if available) or other similar protective tarp - like material. The pool and all applicable accessories such as the pump, cover, ground cloth, ladder, hoses, clamps, and hardware should be kept together and stored indoors, in a reasonably warm, dry and weatherproof location.

Folding Instruction

- Before folding, it's better to dry all parts of the pool completely by lying them in the sun for one hour or so.(**PIC**.1). And then, spread some talcum powder to prevent the vinyl from sticking together.
- **FOLDING INSTRUCTION**
- Step 1. Please fold the protrusion sides inside to create a rectangle shape. (**PIC**.2).
- Step 2. Fold each half of the rectangle to create a smaller rectangle shape. (**PIC**.3).
- Step 3. Fold each end backwards. (**PIC**.4).
- Step 4. Fold the ends together to create an ultimate rectangle. (**PIC**.5).
- **TIPS** 1. Please remove air inside to make the folded pool thin and flat.
- **TIPS** 2. The original packing can be used for storage.

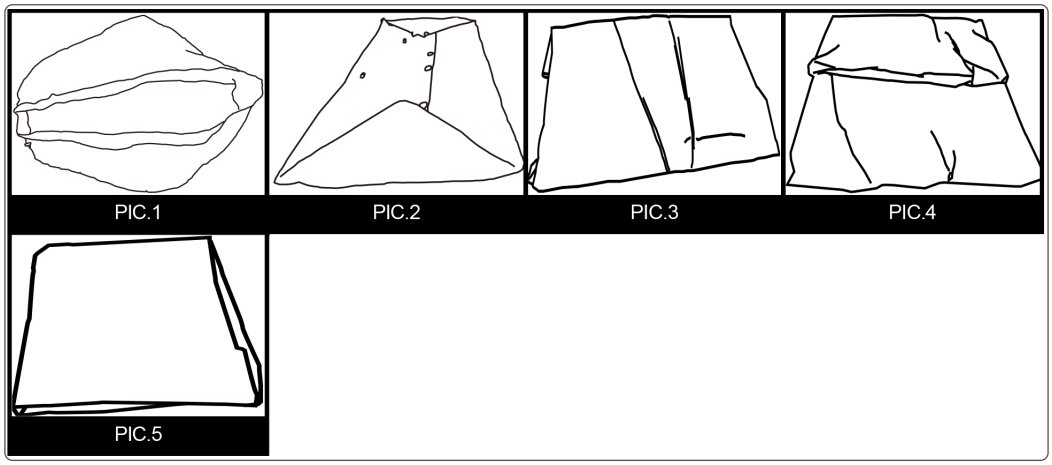

In-Season Pool Maintenance and Water Care

- **WARNING**! If applicable, the filter pump included with your pool is designed to remove dirt and other small particles from your pool water. However, to maintain pool water that is perfectly clear, algae free, and safe from harmful bacteria, it is **VERY IMPORTANT TO ENGAGE IN A CONSISTENT REGIMEN OF CHEMICAL TREATMENT**. Contact your local pool supply retailer for guidance on the safe and effective use of chlorine, shock, algaecide and other such chemicals.
- **WARNING**! To avoid skin and eye irritation or even injury to bathers, never add chemicals to the pool while it is occupied. Never add any chemicals or substances to your pool if you cannot verify the exact quantity or type to add to the water. Consult a pool supply retailer for specific instructions and guidelines concerning the use of chemicals in your pool.
- **WARNING**! It is highly recommended that pool owners frequently test their pool water to ensure that the pH and chlorine concentration in the water is optimal for safe and enjoyable bathing throughout the season. Please consult your pool supply retailer to find a suitable testing kit and instructions on its use.
- **WARNING**! Non-respect of the maintenance rules may result in serious hazards for health and especially for children.
- This product is designed to be a storable, seasonal pool. If you live in a temperate area in which the pool will not be in use year-round, it is **STRONGLY RECOMMENDED** that you drain your pool, clean and dry it thoroughly, and store it in a protected area for the off-season. This will help extend the life of your pool and prevent a safety hazard from developing while the pool is not in use. During the season of use of the pool kit, the filtration system (if applicable) must be put into service each day, long enough to ensure at least a complete renewal of the volume of water.
- irrespective of materials used for swimming pool construction, accessible surfaces have to be checked regularly to avoid injuries.
- In order to keep your pool water clean and hygienic all season long please closely adhere to the following guidelines:
- **A:** The proper and consistent use of basic pool chemicals are required to maintain the proper pH balance in your pool water.
- Furthermore, the application of chemicals will help prevent the growth of harmful bacteria or algae in your pool, and assist your filter-pump in keeping your water crystal clear. Chemicals that your pool may require include but are not limited to:
- 1) Tabular, Granular, or Liquid Chlorine: Disinfects pool water and inhibits algae growth.
- 2) **PH** Adjusting Chemicals: These are used to correct **PH** level and make water more or less acidic.
- 3) Algaecides: These chemicals are formulated to remove algae.
- 4) "Shock" (Super chlorinator): Eliminates certain organic and other combination compounds that can affect water clarity.
- In order to obtain specific details on the use of chemicals, please consult a local pool retailer and provide them with the volume of water in your specific pool, and if desired, a sample of your pool water. This will enable them to properly instruct you on: 1) which chemicals to purchase, 2) what quantities of chemicals to purchase, and 3) how to use specific chemicals safely and effectively.
- **B:** Never let chlorine come into direct contact with the pool liner until it has completely dissolved. This means that granular or tabulated chlorine is first dissolved in a bucket of water before applying to pool water, and likewise, liquid chlorine is slowly and evenly poured into pool water from various locations around the pool perimeter.
- **DANGER**: **NEVER** add water to chemicals. **INSTEAD**, always add chemicals to water. Also, never mix separate chemicals together, rather, add chemicals to the pool separately and allow them to circulate throughout the pool before adding additional types of chemicals.
- **C:** We recommend that you purchase a Dellonda test kit (pool Starter Kit: Model no. **DL63** and Test Strips: Model no. **DL32** test kit) and frequently test your pool water to make sure that your **PH** balance and chlorine levels are optimal.
  NOTE: Excessive chlorine levels or low (acidic) pH levels can damage your pool liner, so please take corrective action as soon as possible if testing reveals either condition.
- The tasks of removing larger debris from your pool and keeping the inside of the pool liner clean are simplified by using a leaf skimmer and garden hose powered vacuum. Please contact the Dellonda service centre if you want to get advice on any repair during the life of the pool kit.
- **D:** Check your filter-pump cartridge every two weeks (or more frequently during periods of heavy usage) to verify whether it needs to be cleaned or replaced. If your cartridge is no longer white in colour, attempt to spray it clean with a strong blast of water from your garden hose. If your cartridge cannot be cleaned in this manner, the cartridge must be replaced, refer to filter pump manual.
- Failure to frequently clean and/or replace your cartridges will affect the effectiveness of your filter pump and could shorten its useful life.
- **E:** If your pool system included a cover, try to keep your pool covered at all times when not in use. This will help keep the wind and other elements from depositing dirt and debris in your pool, and will also prevent excess rainwater from overfilling your pool.
- **F:** Remind your family and friends to always hose or rinse off any dirt or tanning oil from their hands, feet, and body prior to entering the pool.
- **G:** It's necessary to monitor the bolts and hardware of the pool (eg. rust stain) when possible (if applicable).

- **H:** Once your pool has been filled with water for the season, take note if your pool becomes overfilled due to rainwater or accidental overfill. If this should occur, it is important to drain or bale out the excess water as soon as possible.
- **I:** Irrespective of materials used for swimming pool construction, accessible surfaces have to be checked regularly to avoid injuries.

Troubleshooting

- **REPAIR PATCH INSTRUCTIONS**
- Small pinhole and small puncture leaks can be repaired with the included repair patch.
- a) Locate the source of the leak.
- b) Clean the area surrounding the leakage and wipe up all water from the surface.
- c) Take out the repair patch, cut it into required shape and size, which should be larger than the leaking area, put the patch on leaking area and press tightly.
- d) Wait 30 minutes for open-air drying of the repaired position.
- If the damaged area is large, we recommend using a Silicone or rubber based glue for repair.
- **GLUE REPAIR INSTRUCTIONS**
- 1. Find the location of the leak.
- 2. Drain completely.
- 3. Clean the area surrounding the leak and wipe up all water from the surface.
- 4. Thoroughly clean the area surrounding the leak .Cut a piece of repair material in round shape, which should be larger than the damaged area.
- 5. Glue (need to purchase adhesive separately) one side of the material patch to the repair area.
- **Note:** The glue needs to be evenly applied to the material patch.
- 6. Put the patch on the damaged area and press tightly. Wait 12 hours for drying. After patch has dried, apply glue around the edges for a complete seal (dry 4 hours).

Troubleshooting

PROBLEM	DESCRIPTION	CAUSE	REMEDY
Coloured water	• Water turns blue, brown, or black when first treated with chlorine.	• The chlorine is oxidizing minerals in your water. This commonly occurs with water from different sources.	• Adjust pH to recommended level. • Run filter until water is clear. • Regularly clean cartridge.
Particles suspended in Water	• Water looks “milky” or cloudy.	• “Hard Water” caused by an elevated pH. • Chlorination is inadequate. • Foreign debris in water. • Bathers are not cleaning their feet prior to entering pool.	• Adjust pH. Check with a swimming pool supply retailer for correct water treatment. • Ensure proper chlorine level. • Clean or replace your filter. • Spray off dirt with a high-pressure hose before entry.
Persistent low water level	• Pool appears to be losing water on a daily basis.	• Tear or hole in pool liner. • Tear or hole in a filter pump hose. • Hose clamps are too loose. • Evaporation from high summer temperatures.	• Locate damage and repair with the included patch kit. • Repair or replace hoses. • Tighten all hose clamps. • Keep pool covered when not in use.

Filter Pump

Safety Instructions

- **ELECTRICAL SAFETY**
- **WARNING!** It is the user's responsibility to check the following:
- Check all electrical equipment and appliances to ensure that they are safe before using.
- Inspect power supply leads, plugs and all electrical connections for wear and damage.
- Ensure that the insulation on all cables and on the appliance is safe before connecting it to the power supply.
- **DO NOT** use worn or damaged cables, plugs or connectors.
- Ensure that any faulty item is repaired or replaced immediately by a Sealey qualified technician.
- If the cable or plug is damaged during use, switch off the electricity supply and remove from use.
- Sealey recommend that an **RCD** (Residual Current Device) is used with all electrical products.
- **Important!** Ensure that the voltage rating on the appliance suits the power supply.
- **DO NOT** pull the plug from the socket by the cable.
- **GENERAL SAFETY**
- **DO NOT** connect to the mains supply with wet hands or while standing in water.
- Mains supply must be protected by a **RCD**, see above.
- **DO NOT** use a damaged or frayed mains cable.
- **WARNING**! The pump must be installed at least 2m from the pool.
- **WARNING**! The pump must be fixed to the ground or a suitable stable pedestal, using Ø5mm screws, to prevent accidental falling.
- **WARNING**! Filter pump is not to be used by children. Adult assembly and operation only.
- **DO NOT** bury the mains cable. Locate it where it will not be damaged by lawn mowers, hedge trimmers and other garden equipment.
- Ensure before each use of the pump, that all clamps are tightened and that all hoses are properly connected.
- **WARNING**! **DO NOT** use this filter pump to vacuum the pool.
- **WARNING**! This filter pump is designed **ONLY** for use with storable pools. It must not be used for permanently installed pools. Improper use will cause overheating and the motor to be damaged.
- **WARNING**! To avoid overheating of the pump motor, make sure the pump is pumping water. Never allow to run dry.
- **WARNING**! Air in the system will make the pump race and will cause damage to the pump. Refer to Operation section.
- This product can be used by children aged from 8 years and above and persons with reduced physical, sensory or mental capabilities or lack of experience or knowledge if they have been given supervision or instruction concerning use of the appliance in a safe way and understand the hazards involved. Children shall not play with the appliance. Cleaning and user maintenance shall not be made by children without supervision.
- **WARNING**! The pump must not be used when people are in the water.
- The maximum total head is 0.9m.

Contents

Part no.	Description	Quantity
P1	Air purge cover	1
P2	Air purge cover seal	1
P3	Filter chamber cover retainer	1
P4	Filter chamber cover	1
P5	Filter chamber cover gasket	1
P6	Filter chamber	1
P7	Filter chamber	1
P8	Number not used	1
P9	Power cable	1
P10	O ring	2
P11	Hose clamp	4
P12	Connector hose	2
P13	Filter net	2
P14	Connector	2

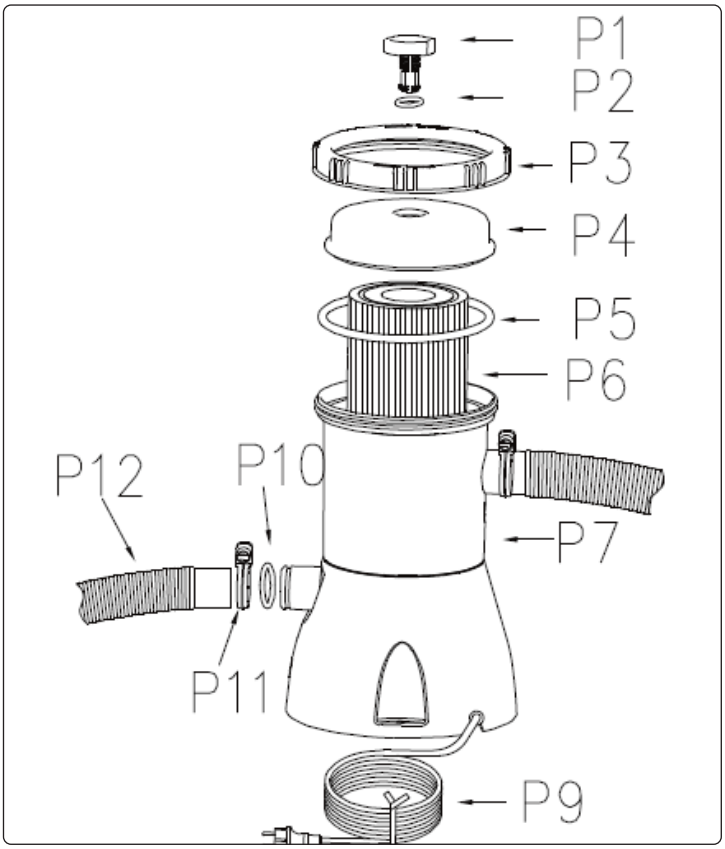

Installation

- **Refer to Contents and Installation diagrams**
- Before installation of filter pump ensure pool is fully assembled and filled with water to the correct maximum level.
- Low water level in the pool (and therefore the filter pump) will cause the filter pump motor to be noisy and could cause damage.
- Remove filter pump from its packaging.
- Place the pump at least 0.2m below the level of the pool water and not more than 1m below the level of the pool water.
- Mount the filter pump on solid and even ground (use the holes in the base of the pump to secure it to a solid surface, see Safety section.)
- **DO NOT** place the pump in tall grass as it may cause the motor to overheat.
- Make sure the filter pump is correctly assembled, as shown in the contents diagram.
- Finger tighten the filter chamber cover retainer (P3), clockwise.
- Connect filter hose (P12) to the inlet port of the filter pump (top) to the lower hose connection of the pool. Fix the hose with the clamps (P11).
- Gently turn the air purge cover (P1) anticlockwise 1-2 turns.
- Connect the second filter hose (P12) to the upper hose connection of the pool and the outlet port (bottom) of the filter pump. Fix the hose with the hose clamp, (P11).

Operation

- Ensure that all Safety and Installation instructions have been carried out.
- With water flowing into the pump, water pressure will allow the air in the system to escape from the air purge cover (P1).
- Then gently tighten clockwise, the air purge cover (P1).
- Connect the mains supply after ensuring that all electrical and safety instructions have been carried out (refer to Electrical and General safety sections above.)
- Operate the filter pump until water becomes clear.
- Pump must **NOT** be used when the pool is occupied.

Maintenance

- **WARNING**! Disconnect from the mains supply before carrying out any maintenance procedures to the pool or the filter pump.
- It is recommended to keep 2 spare filter cartridges at all times.
- **CLEANING**
- Wash the outside of the filter with mild detergent and water **DO NOT** use solvents.
- **FILTER CLEANING/REPLACEMENT**
- Remove filter chamber cover retainer (P3), anticlockwise.
- Clean the filter cartridge (P6), with running water, or replace if necessary.
- Check the inside of the filter chamber, (P7). If dirt or sediment is found in the bottom of the chamber, flush the chamber out with a bucket of water or use a hose.
- Carefully refit the filter and the filter chamber cover and retainer ensuring all o rings are correctly positioned.
- Reconnect the mains supply.
- **STORAGE**
- After the pool water has been completely emptied out remove all hoses from the pool and filter pump.
- Empty water from all the housings of the filter pump.
- Store all components in a dry and ventilated location. Ensure all parts are dry.

Accessories

A range of accessories are available for this Dellonda swimming pool which can be ordered via the Dellonda website (www.dellonda.co.uk) or by contacting our support team, the full list is as follows:

- DL36 - Filter Cartridge
- DL38 - Antimicrobial Filter Cartridge
- DL42 - Cover with Rope Ties
- DL46 - Ground Sheet
- DL63 - Swimming Pool Starter Kit
- DL32 - Pack of 50 Test Strips
- DL50 - 1kg Chlorine Granules
- DL51 - 1kg Chlorine Mini Tablets
- DL52 - 1.5kg pH Reducers
- DL53 - 1kg pH Plus
- DL54 - 1kg Alkalinity Plus
- DL55 - 1kg De-foamer
- DL56 - 1L Cartridge Cleaner

Troubleshooting

- **PUMP DOES NOT OPERATE:**
- Check for blown fuses, trip switches or disconnected mains supply.
- Check the motor, if it is too hot or overloaded turn it off and let the motor cool down.
- Seek professional help with the repair.
- **PUMP MOTOR RUNS BUT DOES NOT PUMP WATER OR WATER FLOW IS SLOW:**
- Check for obstructions in the intake or discharge hoses or in the pool itself.
- Tighten hose clamps, check hoses for damage, check pool water level.
- Clean/replace filter cartridge.
- **PUMP LOSES PRIME**
- Ensure water level is at least 5cm above the outlet pipe.
- Ensure there are no leaks in the suction piping.
- Check if filter cartridge is dirty.
- **FILTER DOES NOT CLEAN POOL**
- Adjust chlorine and pH level.
- Clean or replace filter cartridge.
- Check for holes in cartridge.
- Let pump operate for longer.
- Clean away debris from filter net at pool wall.
- Seek expert help.

Environment Protection and Waste Protection and Electrical Equipment Regulations (WEEE)

Recycle unwanted packaging materials. When this product is no longer required, or has reached the end of it's useful life, please dispose of it in an environmentally friendly way. Drain any fluids (if applicable) into approved containers, in accordance with local waste regulations. Under the Waste Batteries and Accumulators Regulations 2009, Dellonda would like to inform the user that this product contains one or more batteries. It is our policy to continually improve products and we reserve the right to alter data, specifications and parts without prior notice. No liability is accepted for incorrect use of this product. Guarantee is 12 months from purchase date, proof of which is required for any claim.

Jack Sealey (EU) Ltd t/a Dellonda Farney Street, Carrickmacross, Co. Monaghan, A81 PK68 Ireland
Jack Sealey Ltd t/a Dellonda Kempson Way, Suffolk Business Park, Bury St Edmunds, Suffolk, IP32 7AR UK
Tel: 01284 757575 ▪ **Email:** support@dellonda.co.uk ▪ **Web:** www.dellonda.co.uk