SEALEY

THE TOOL COMPANY

PARTS INFORMATION

Premier Heavy-Duty Air/Hydraulic Floor Type Press with Foot Pedal 30 Tonne

Model No. YK309FAH.V3

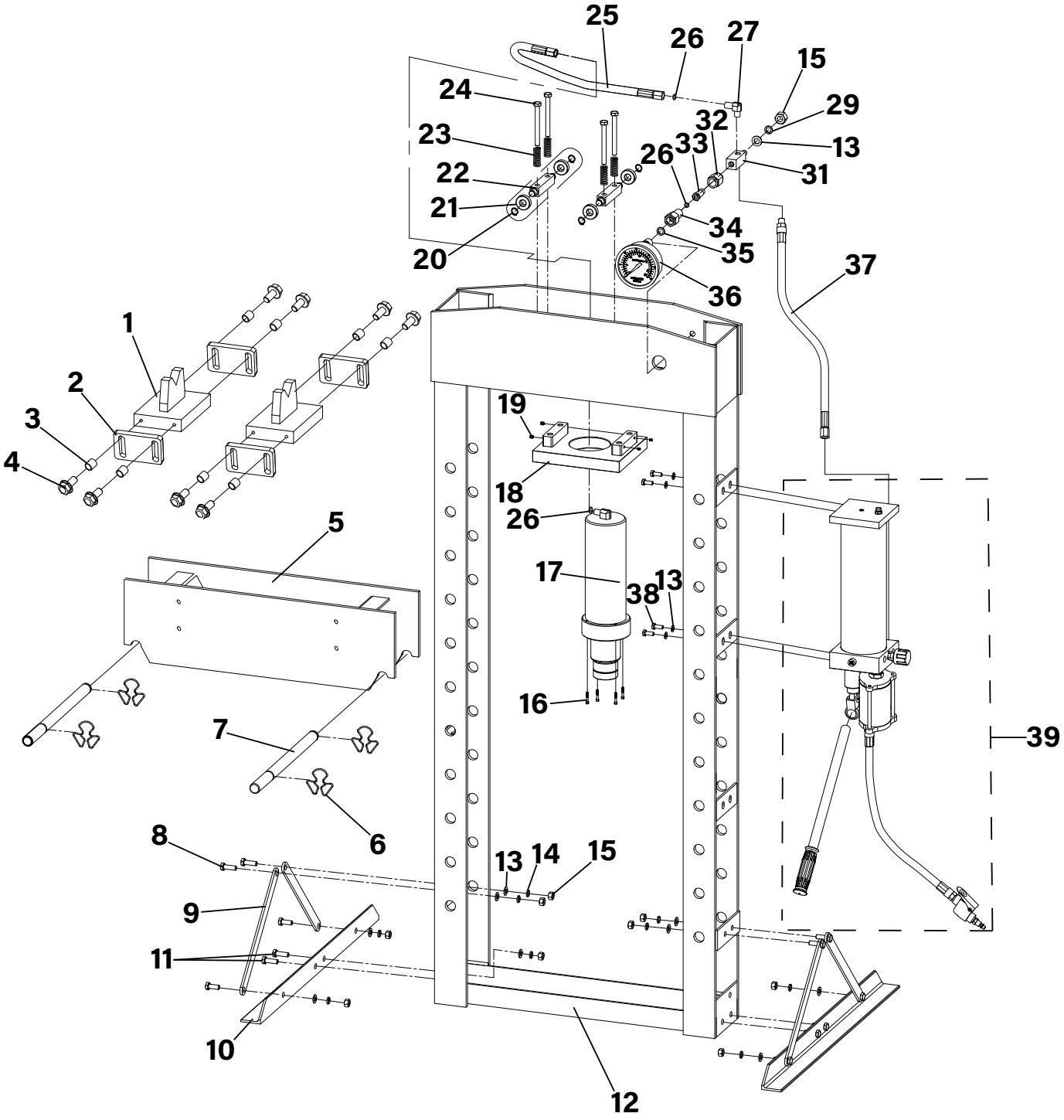

© Jack Sealey Limited

Premier Heavy-Duty Air/Hydraulic Floor Type Press with Foot Pedal 30 Tonne

THE TOOL COMPANY

Model No. YK309FAH.V3

Item	Part No.	Description	Qty
1	YK309FAH-V3-01	V-Block	2
2	YK309FAH-V3-02	Limited Block	4
3	YK309FAH-V3-03	Bushing	8
4	SFS816.S	Hex Head Flange Bolt M8 x 16mm Zinc	8
5	YK309FAH-V3-05	Bed Frame	1
6	YK309FAH-V3-06	Clip for Table Support Pin	4
7	YK309FAH-V3-07	Table Support Pin	2
8	SS1025.S	Hex Head Set Screw M10 x 25mm Zinc	8
9	YK309FAH-V3-09	Support Brace	4
10	YK309FAH-V3-10	Base Foot	2
11	SS1035.S	Hex Head Set Screw M10 x 35mm Zinc	4
12	YK309FAH-V3-12	Frame	1
13	FWM12.S	Flat Washer M12 Zinc	17
14	SWM10.S	Spring Washer M10 Zinc	12
15	SN12.S	Steel Nut M12 Zinc	13
16	SCB855.S	Socket Cap Bolt M8 x 55mm	4
17	YK309FAH-V3-17	Ram Assembly	1
18	YK309FAH-V3-18	Ram Plate	1
19	GSM68.S	Grub Screw M6 x 8mm	4

Item	Part No.	Description	Qty
20	YK309FAH-V3-20	External Circlip Ø16mm	4
21	YK309FAH-V3-21	Guide Roller	4
22	YK309FAH-V3-22	Guide Roller Location Beam	2
23	YK309FAH-V3-23	Spring	4
24	HHB10110.S	Hex Head Bolt M10 x 110mm	4
25	YK309FAH-V3-25	Oil Hose (A)	1
26	YK309FAH-V3-26	O-Ring 5.2 x 1.9mm	3
27	YK309FAH-V3-27	Elbow	1
29	SWM12.S	Spring Washer M12 Zinc	1
31	YK309FAH-V3-31	Connector	1
32	YK309FAH-V3-32	Gauge Nut	1
33	YK309FAH-V3-33	Gauge Screw	1
34	YK309FAH-V3-34	Gauge Connector	1
35	YK309FAH-V3-35	Nylon Washer	1
36	YK309FAH-V3-36	Pressure Gauge	1
37	YK309FAH-V3-37	Oil Hose (B)	1
38	SS1020.S	Hex Head Set Screw M10 x 20mm Zinc	4
39	YK309FAH-V3-39	Pneumatic/Manual Pump Assembly	1
--	YK309FAH-V3-40	Foot Pedal (Not Shown)	1

Note: It is our policy to continually improve products and as such we reserve the right to alter data, specifications and component parts without prior notice. See www.sealey.co.uk for the latest information.
Important: No liability is accepted for incorrect use of product. Spare parts must be fitted by a competent person.

Jack Sealey (EU) Ltd t/a Sealey Group Farney Street, Carrickmacross, Co. Monaghan, A81 PK68 Ireland
Jack Sealey Ltd t/a Sealey Group Kempson Way, Suffolk Business Park, Bury St Edmunds, Suffolk, IP32 7AR UK
Tel: 01284 757500 ▪ **Email:** sales@sealey.co.uk ▪ **Web:** www.sealey.co.uk

© Jack Sealey Limited