SEALEY

THE TOOL COMPANY

PARTS INFORMATION

Trolley Jack with Super Rocket Lift 3.5 Tonne

Model No. 3500CXD

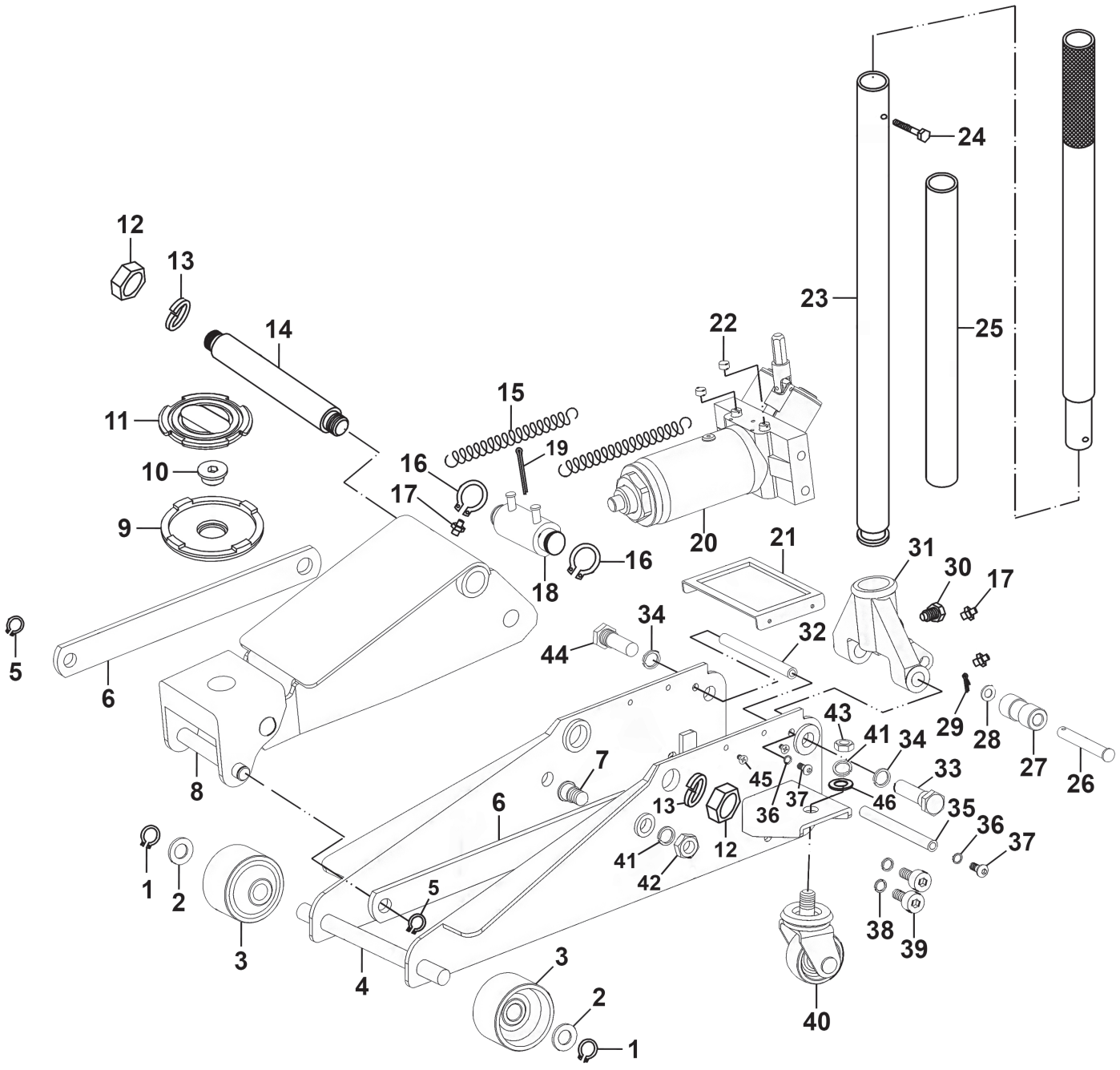

Item	Part No.	Description	Qty
1	3500CXD-01	External Circlip Ø18	2
2	FWM18.S	Flat Washer M18 Zinc	2
3	3500CXD-03	Front Wheel	2
4	3500CXD-04	Frame Assembly	1
5	3500CXD-05	External Circlip Ø16	2
6	3500CXD-06	Link Rod	2
7	3500CXD-07	Bolt For Link Rod	2

Item	Part No.	Description	Qty
8	3500CXD-08	Lifting Arm Assembly	1
9	3500CXD-09	Saddle	1
10	3500CXD-10	Saddle Pin	1
11	JP17	Safety Rubber Jack Pad - Type B (Please See Catalogue)	1
12	3500CXD-12	Hex Nut M20 (Thin)	2
13	SWM20.S	Spring Washer M20 Zinc	2

© Jack Sealey Limited

Trolley Jack with Super Rocket Lift 3.5 Tonne

THE TOOL COMPANY

Model No. 3500CXD

Item	Part No.	Description	Qty
14	3500CXD-14	Lifting Arm Pin	1
15	3500CXD-15	Return/Tension Spring	2
16	3500CXD-16	External Circlip Ø25	2
17	GNM19S	Grease Nipple Str 6 x 1.00mm single	3
18	3500CXD-18	Connecting Rod	1
19	3500CXD-19	Split Pin Ø4x45	1
20	3500CXD-20	Hydraulic Pump Assembly	1
21	3500CXD-21	Cover Plate	1
22	3500CXD-22	Safety Cap	2
23	3500CXD-23	Handle Assembly	1
24	SS635.S	Hex Head Set Screw M6 X 35 Zinc	1
25	3500CXD-25	Handle Protection Foam	1
26	3500CXD-26	Idler Roller Pin	1
27	3500CXD-27	Idler Roller	1
28	FWM12.S	Flat Washer M12 Zinc	1
29	3500CXD-29	Spli Pin Ø2.5 x 20	1
30	3500CXD-30	Handle Socket Screw M12	1
31	3500CXD-31	Handle Socket	1

Item	Part No.	Description	Qty
32	3500CXD-32	Handle Socket Limit Pin	1
33	3500CXD-33	Bolt For Handle Socket (Left)	1
34	SWM18.S	Spring Washer M18 Zinc	2
35	3500CXD-35	Reinforcement Spindle	1
36	SWM8.S	Spring Washer M8 Zinc	4
37	BHSS820.S	Button Head Socket Screw M8 X 20 Zinc	4
38	SWM10.S	Spring Washer M10 Zinc	4
39	SCB1020.S	Socket Cap Bolt M10 x 20mm	4
40	3500CXD-40	Wheel, Swivel Castor, Single Bolt	2
41	SWM16.S	Spring Washer M16 Zinc	4
42	3500CXD-42	Nut M16 (Thin)	2
43	SN16.S	Steel Nut M16 Zinc	2
44	3500CXD-44	Bolt For Handle Socket (Right)	1
45	MSC515.S	Csk Phillips Machine Screw M5 X 15 Zinc	4
46	FWM16.S	Flat Washer M16 Zinc	2
--	3500CXD-RK	Repair Kit (Not Shown)	1

Note: It is our policy to continually improve products and as such we reserve the right to alter data, specifications and component parts without prior notice. See www.sealey.co.uk for the latest information.
Important: No liability is accepted for incorrect use of product. Spare parts must be fitted by a competent person.

Jack Sealey (EU) Ltd t/a Sealey Group Farney Street, Carrickmacross, Co. Monaghan, A81 PK68 Ireland
Jack Sealey Ltd t/a Sealey Group Kempson Way, Suffolk Business Park, Bury St Edmunds, Suffolk, IP32 7AR UK
Tel: 01284 757500 ▪ **Email:** sales@sealey.co.uk ▪ **Web:** www.sealey.co.uk

© Jack Sealey Limited