SEALEY

THE TOOL COMPANY

PARTS INFORMATION

# Axle Stands (Pair) 10 Tonne Capacity per Stand Auto Rise Ratchet

## Model No. AAS10000

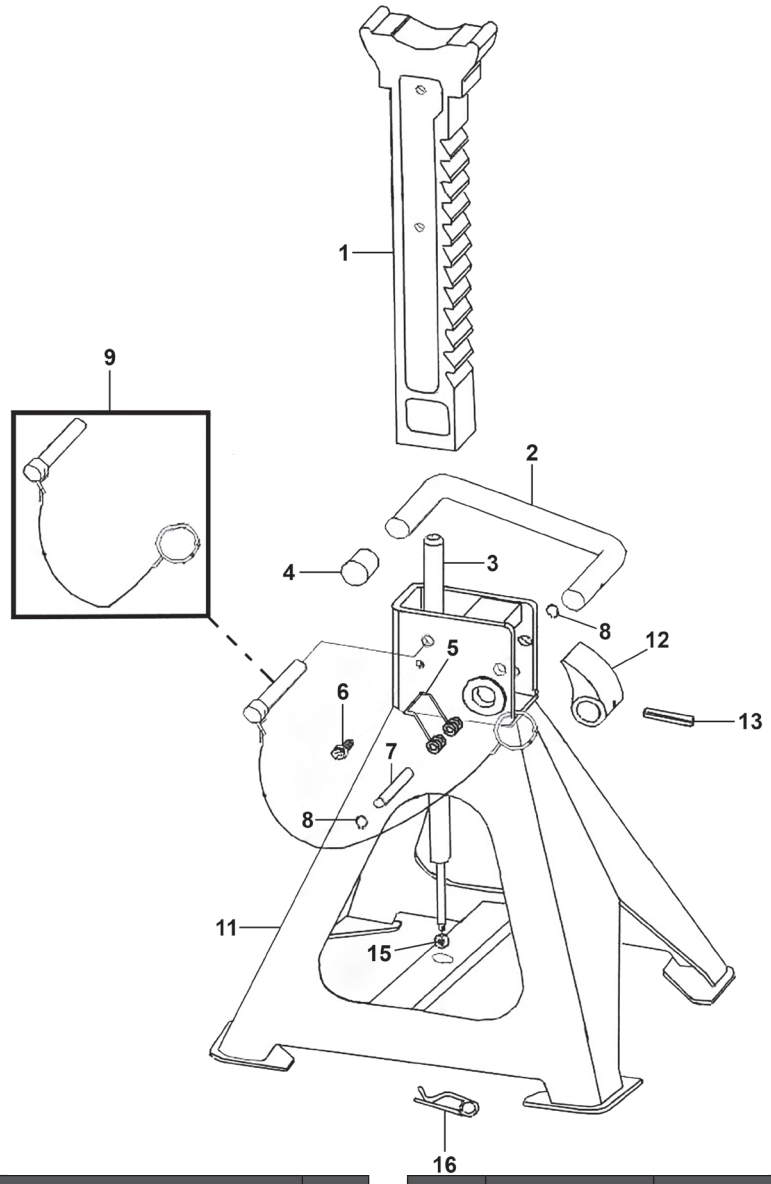


| Item | Part No. | Description | Qty |
|---|---|---|---|
| 1 | AAS10000.01 | Centre Column | 2 |
| 2 | AAS10000.02 | Locking Lever | 2 |
| 3 | AAS10000.03 | Gas Strut 650mm | 2 |
| 4 | AAS10000.04 | Locking Lever Grip | 2 |
| 5 | AAS10000.05 | Pawl Spring Dia 24mm | 2 |
| 6 | AAS10000.06 | Socket Cap Screw M8x25 | 2 |
| 7 | AAS10000.07 | Locking Pin | 2 |

| Item | Part No. | Description | Qty |
|---|---|---|---|
| 8 | ER1700PD.37 | External Circlip 9.2mm ID. | 4 |
| 9 | AAS10000.09A | Pin & Wire Ass'y | 2 |
| 11 | AAS10000.11 | Base Frame | 2 |
| 12 | AAS10000.12 | Pawl | 2 |
| 13 | AAS3000.10 | Spring Pin M5 X 30 | 2 |
| 15 | AAS10000.15 | Washer | 2 |
| 16 | AAS10000.16 | R-Pin | 2 |

**Note:** It is our policy to continually improve products and as such we reserve the right to alter data, specifications and component parts without prior notice. See www.sealey.co.uk for the latest information.
**Important:** No liability is accepted for incorrect use of product. Spare parts must be fitted by a competent person.

**Jack Sealey (EU) Ltd t/a Sealey Group** Farney Street, Carrickmacross, Co. Monaghan, A81 PK68 Ireland
**Jack Sealey Ltd t/a Sealey Group** Kempson Way, Suffolk Business Park, Bury St Edmunds, Suffolk, IP32 7AR UK
**Tel:** 01284 757500 ▪ **Email:** sales@sealey.co.uk ▪ **Web:** www.sealey.co.uk

© Jack Sealey Limited