™ POWER TOOL STORAGE RACK WITH SHELVES

MODEL NO: **PTSR4**

Thank you for purchasing a Sealey product. Manufactured to a high standard, this product will, if used according to these instructions, and properly maintained, give you years of trouble free performance.

IMPORTANT: PLEASE READ THESE INSTRUCTIONS CAREFULLY. NOTE THE SAFE OPERATIONAL REQUIREMENTS, WARNINGS & CAUTIONS. USE THE PRODUCT CORRECTLY AND WITH CARE FOR THE PURPOSE FOR WHICH IT IS INTENDED. FAILURE TO DO SO MAY CAUSE DAMAGE AND/OR PERSONAL INJURY AND WILL INVALIDATE THE WARRANTY. KEEP THESE INSTRUCTIONS SAFE FOR FUTURE USE.



Refer to instruction manual



Wear protective gloves

1. SAFETY

- ❑ **WARNING!** Ensure Health & Safety, and local authority regulations are adhered to when assembling and using this tool rack.
- ✓ Locate tool rack in a suitable area where it will not be an obstruction.
- ✓ Keep the general area clean, uncluttered and ensure there is adequate lighting.
- ❑ **WARNING!** Mount tool rack on a flat and solid wall such as breeze block that is strong enough to hold fully laden tool rack.
- ✓ Secure the tool rack firmly to the wall using appropriate fixings that are suitable for your wall type. Some fixings are included.
- × **DO NOT** attempt to wall mount the tool storage rack on your own. Obtain assistance or use manual handling equipment.
- ✓ Wall mount the tool storage rack at such a height that minimises the risk of injury when used.
- ✓ Keep children and unauthorised persons away from the storage area.
- × **DO NOT** use the tool storage rack for any purpose other than that for which it is designed.
- × **DO NOT** site the too storage rack out of doors.
- × **DO NOT** get the tool rack wet or use in damp or wet locations or areas where there is condensation.
- × **DO NOT** clean the tool storage rack with any solvents or abrasives which may damage the coated surface.
- × **DO NOT** overload the tool storage rack when wall mounted.
- × Ensure that the tool rack is properly and firmly assembled and installed before loading it.

2. INTRODUCTION

Heavy-duty powder-coated steel construction for strength and corrosion resistance. Holds up to four power tools with easy front-loading access. Three upper shelves for storing batteries, chargers, and accessories. Wall-mountable with pre-drilled holes. Accessories included: Spanner rack, two parts storage containers, drill bit holder and eight tool hooks. Supplied flat-packed.

3. SPECIFICATION

Model No	PTSR4
Dimensions (W x D x H)	600 x 245 x 450mm
Nett Weight	3.8kg
Power Tool Storage Bays	4
Shelves	3

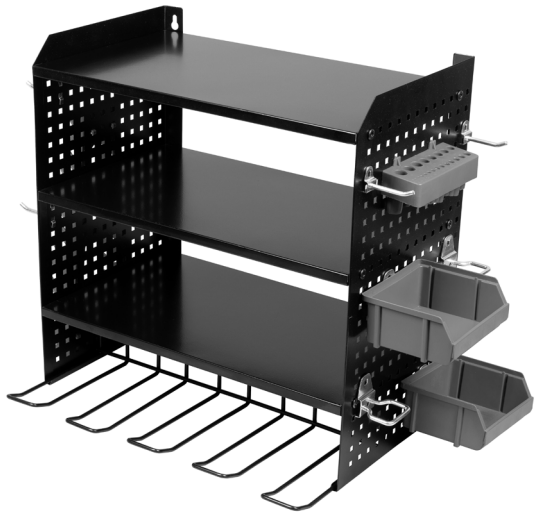

© Jack Sealey Limited

4. CONTENTS

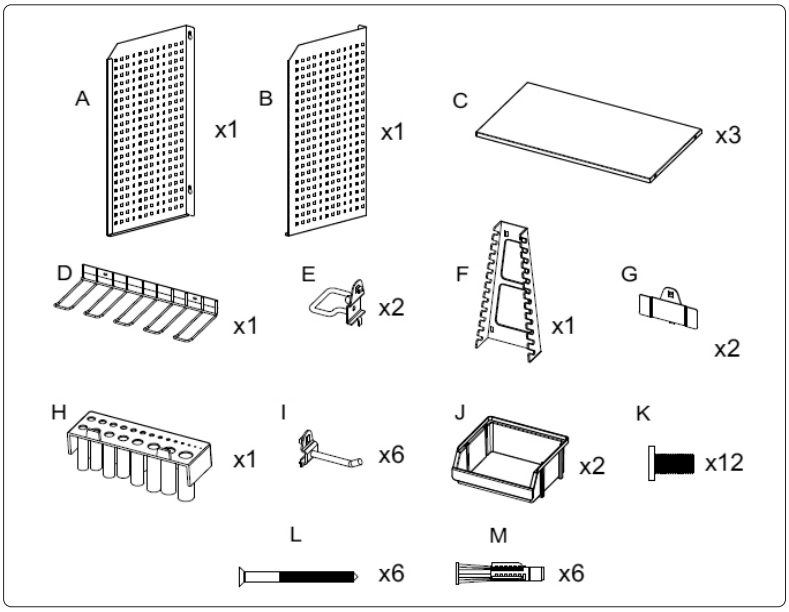

5. ASSEMBLY

Step.1

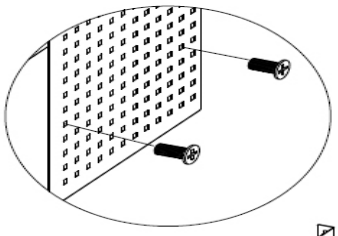

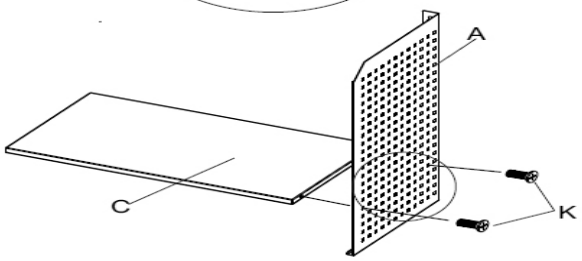

Step.2

Note: The installation method on the right is for reference only.You can change the installation location based on your own needs.

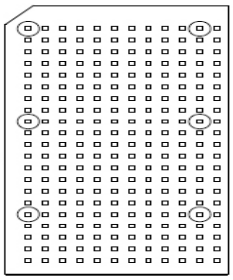

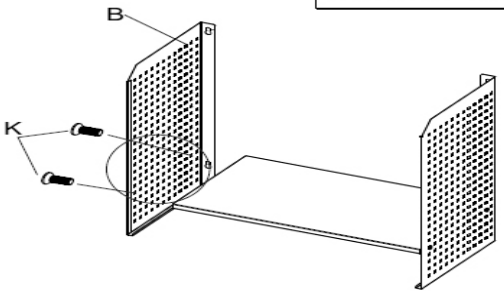

Step.3

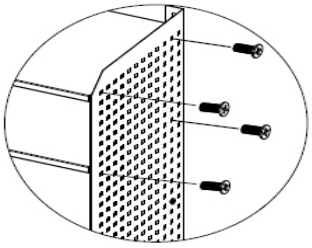

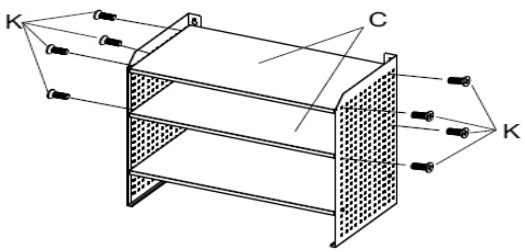

Step.4

Refer to the dimensions provided in the drawing. Drill holes at the designated wall positions as indicated. Insert the wall plugs into the drilled holes, then secure the fixture using 4.5 mm self-tapping screws.

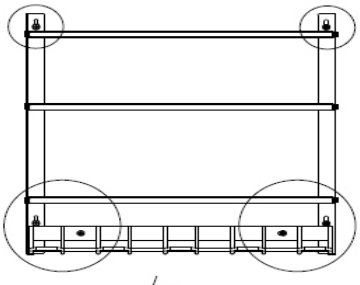

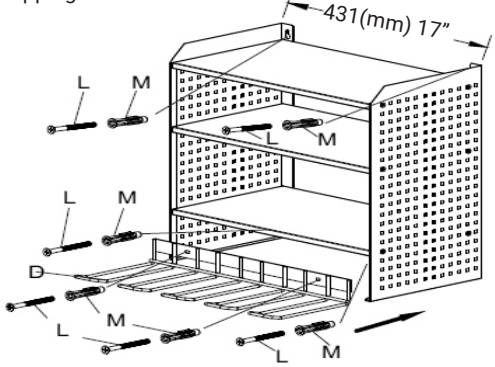

© Jack Sealey Limited

Step.5

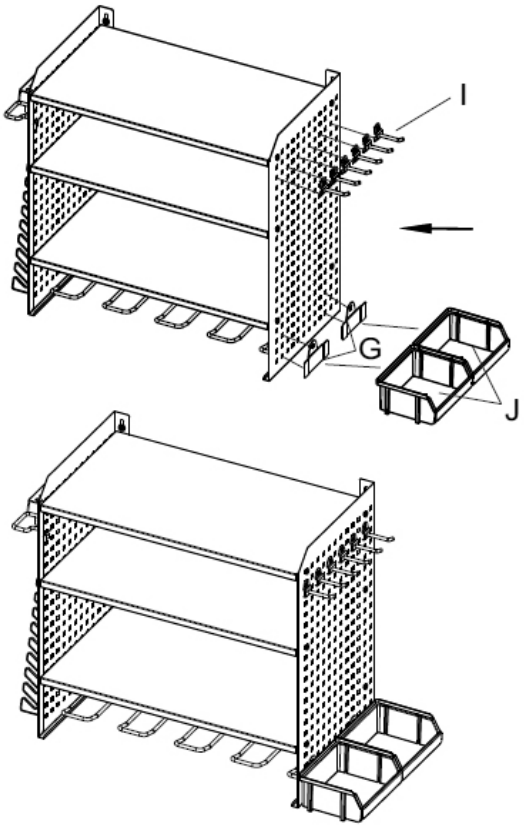

Step.6

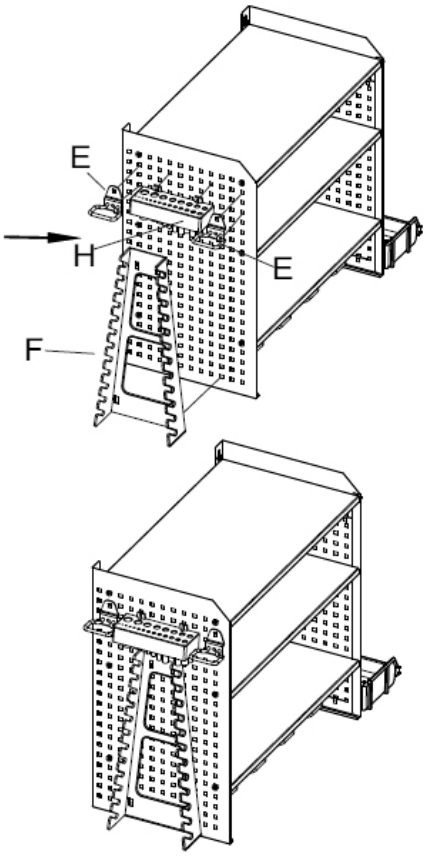

6. INSTALLATION

6.1. Rack can be installed onto a peg board (using nuts and bolts) or a wall.
6.2. If installing into a wall, ensure wall (and fixings) are able to support the weight of the rack and any tools stored upon it.
6.3. Hold rack in place to mark and then pre-drill holes.
6.4. Use fixings appropriate to the wall being used to fix the rack to.

7. MAINTENANCE

7.1. Regularly check fixings and mountings are firmly fitted and that the rigidity and security of the rack is not compromised.
7.2. Wipe clean with damp cloth.
× **DO NOT** use chemical or abrasive cleaners as this may result in damage to the surface.

ENVIRONMENT PROTECTION
Recycle unwanted materials instead of disposing of them as waste. All tools, accessories and packaging should be sorted, taken to a recycling centre and disposed of in a manner which is compatible with the environment. When the product becomes completely unserviceable and requires disposal, drain any fluids (if applicable) into approved containers and dispose of the product and fluids according to local regulations.

Note: It is our policy to continually improve products and as such we reserve the right to alter data, specifications and component parts without prior notice.
Important: No Liability is accepted for incorrect use of this product.
Warranty: Guarantee is 12 months from purchase date, proof of which is required for any claim.

Jack Sealey Ltd t/a Sealey Group, Kempson Way, Suffolk Business Park, Bury St Edmunds, Suffolk, IP32 7AR UK
Jack Sealey (EU) Ltd t/a Sealey Group, Farney Street, Carrickmacross, Co. Monaghan, A81 PK68 Ireland
Tel: 01284 757500 ▪ **Email:** sales@sealey.co.uk ▪ **Web:** www.sealey.co.uk

© Jack Sealey Limited