Parts Information:

Air Impact Wrench 3/8"Sq Drive Heavy-Duty

Model No: SA912.V3

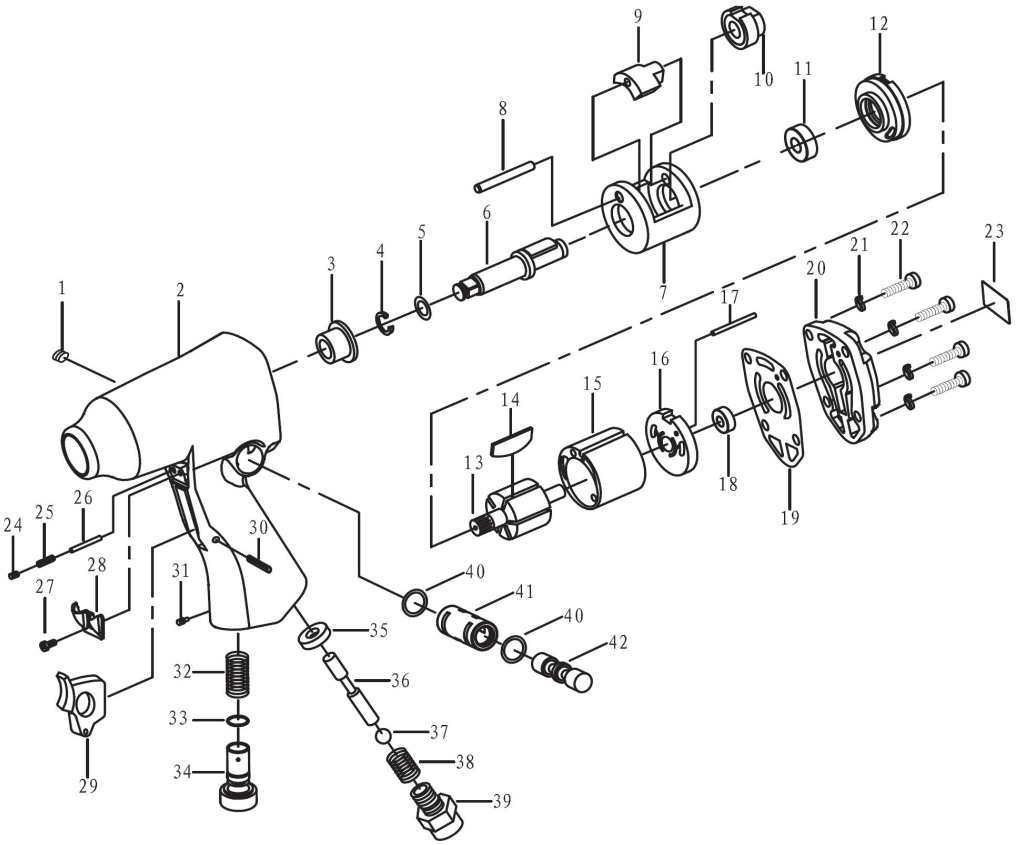

Item	Part No.	Description
1	GSM88.S	Grub Screw M8x8 (Single)
2	SA912.V3-02	Housing
3	SA912.V3-03	Anvil Bushing
4	SA912.V3-04	Anvil Collar
5	SA912.V3-05	O-Ring (3.2x1.9mm)
6	SA912.V3-06	Anvil
7	SA912.V3-07	Hammer Cage
8	SA912.V3-08	Hammer Cage Pin
9	SA912.V3-09	Hammer Dog
10	SA912.V3-10	Drive Cam
11	B/6900ZZ	Bearing 6900ZZ
12	SA912.V3-12	Front End Plate
13	SA912.V3-13	Rotor
14	SA912.V3-14	Rotor Blade
15	SA912.V3-15	Cylinder
16	SA912.V3-16	Rear End Plate
17	SA912.V3-17	Cylinder Pin
18	B/626ZZ	Bearing 626ZZ
19	SA912.V3-19	Rear Gasket
20	SA912.V3-20	Rear Cover
21	SWM5.SB	Spring Washer M5 Black (Single)

Item	Part No.	Description
22	SCB514.SB	Socket Head Cap Screw M5x14 Black
23	SA912.V3-23	Name Plate
24	GSM44.S	Grub Screw M4x4 (Single)
25	SA912.V3-25	Spring
26	SA912.V3-26	Pin
27	SA912.V3-27	Self Tapping Screw 2.9x8mm
28	SA912.V3-28	Exhaust Deflector
29	SA912.V3-29	Trigger
30	SA912.V3-30	Trigger Pin
31	SA912.V3-31	Housing Screw (M5x8)
32	SA912.V3-32	Regulator Spring
33	SA912.V3-33	O-Ring (8x2mm)
34	SA912.V3-34	Air Regulator
35	SA912.V3-35	Bushing
36	SA912.V3-36	Valve Stem
37	SB-9.5	Steel Ball 9.5mm
38	SA912.V3-38	Taper Spring
39	SA912.V3-39	Air Inlet Connector
40	SA912.V3-40	O-Ring (9.8x1.5mm)
41	SA912.V3-41	Reversal Regulator Sleeve
42	SA912.V3-42	Reversal Regulator Valve

NOTE: It is our policy to continually improve products and as such we reserve the right to alter data, specifications and component parts without prior notice.
IMPORTANT: No liability is accepted for incorrect use of product.
WARRANTY: Guarantee is 12 months from purchase date, proof of which will be required for any claim.

Sealey Group, Kempson Way, Suffolk Business Park, Bury St Edmunds, Suffolk. IP32 7AR
01284 757500 | 01284 703534 | sales@sealey.co.uk | www.sealey.co.uk