SEALEY
THE TOOL COMPANY

42” Tow-Behind Lawn Sweeper

Model No. SLS42T

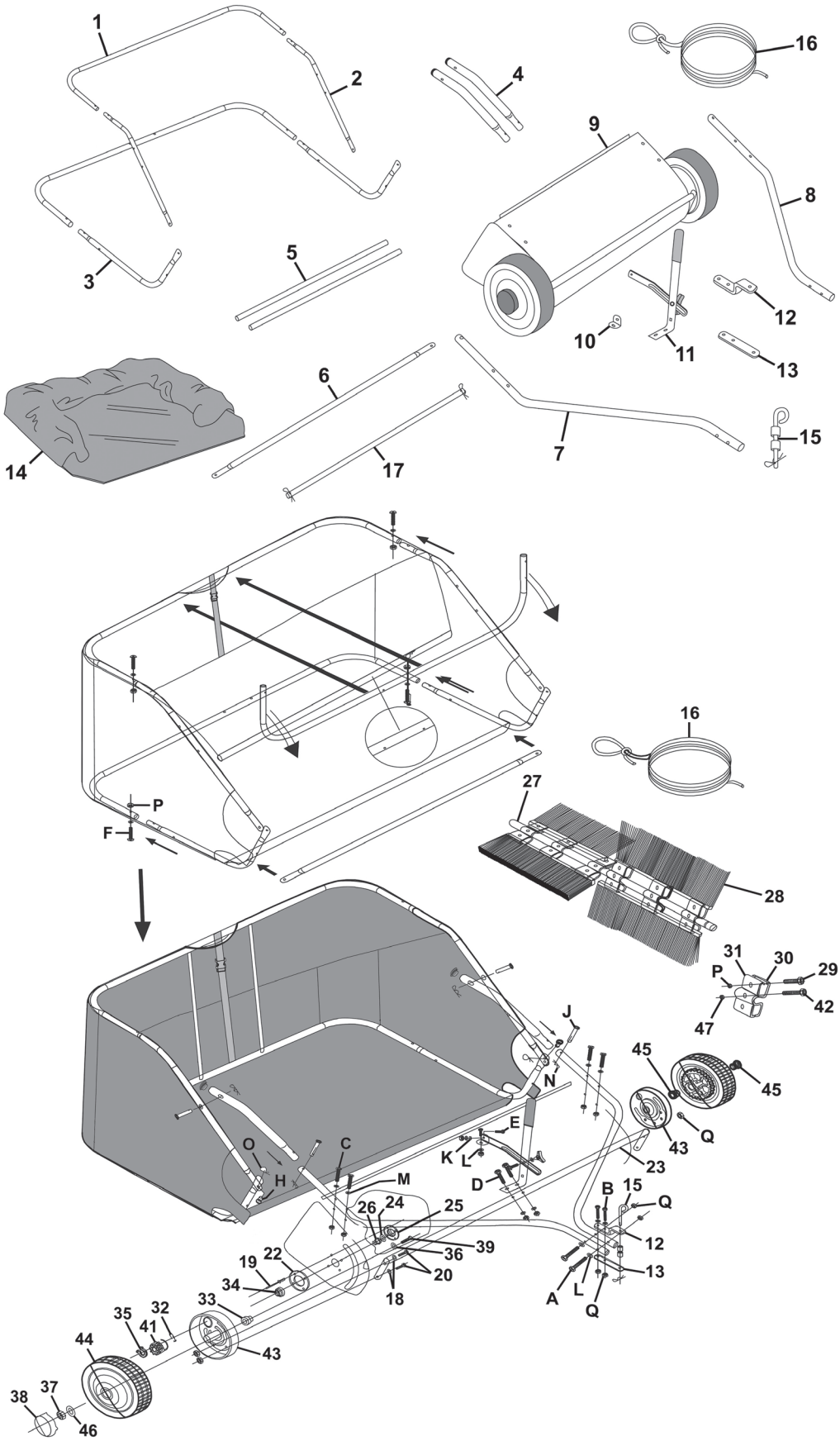

© Jack Sealey Limited

SEALEY

THE TOOL COMPANY

42” Tow-Behind Lawn Sweeper

Model No. SLS42T

Item	Part No.	Description	Qty
1	SLS42T-01	Rear Hopper Tube	2
2	SLS42T-02	Upper Hopper Side Tube	2
3	SLS42T-03	Lower Hopper Side Tube	2
4	SLS42T-04	Bag Arm Tube	2
5	SLS42T-05	Hopper Support Rod	2
6	SLS42T-06	Bag Frame Strap	1
7	SLS42T-07	Hitch Tube, Left Side	1
8	SLS42T-08	Hitch Tube, Right Tube	1
9	SLS42T-09	Sweeper Housing Assembly	1
10	SLS42T-10	Angle bracket	1
11	SLS42T-11	Handle Assembly	1
12	SLS42T-12	Hitch Bracket	1
13	SLS42T-13	Hitch Bracket (Straight)	1
14	SLS42T-14	Hopper Bag	1
15	SLS42T-15	Hitch Pin/Spacer/R-Pin	1
16	SLS42T-16	Rope	1
17	SLS42T-17	Front Support Rod	1
18	FWM8.S	Flat Washer M8 Zinc	4
19	SLS42T-19	Machine Screw Pan Head Phillips M5 X 13mm	8
20	SS816.S	Hex Head Set Screw M8 X 16 Zinc	4
21	SLS42T-21	Wrapper	1
22	SLS42T-22	Special Washer	2
23	SLS42T-23	Height Adjustment Tube Ass'y	1
24	SLS42T-24	Inside Washer	2
25	SLS42T-25	Dust Cover Retainer	1
26	SLS42T-26	Brush Shaft Bushing	2
27	SLS42T-27	Brush Shaft	1
28	SLS42T-28	Brush	4
29	SS620.S	Hex Head Set Screw M6 X 20 Zinc	8
30	SLS42T-30	Retainer, Brush (Double)	4
31	SLS42T-31	Retainer, Brush (Single)	8
32	SLS42T-32	Dowel Pin (Drive)	2
33	SLS42T-33	Spacer for Axle	2
34	SLS42T-34	Bushing	2
35	SLS42T-35	Internal Circlip Ø15	2
36	SLS42T-36	Big Flat Washer Ø10	2
37	NLN10.S	Nyloc Nut M10 Zinc	2
38	SLS42T-38	Hub Cap	2
39	SLS42T-39	Hex Head Bolt M10 x 85mm	2
40	SLS42T-40	Pinion Gear L.H.	1
41	SLS42T-41	Pinion Gear R.H.	1
42	SS525.S	Hex Head Set Screw M5 X 25 Zinc	4
43	SLS42T-43	Dust Cover Assembly	2
44	SLS42T-44	Wheel	2
45	SLS42T-45	Wheel Bushing	4
46	SLS42T-46	Big Flat Washer Ø10	2
47	NLN5.S	Nyloc Nut M5 Zinc	4
A	SS865.S	Hex Head Set Screw M8 x 65	2
B	SS850.S	Hex Head Set Screw M8 X 50 Zinc	2
C	SS640.S	Hex Head Set Screw M6 X 40 Zinc	4
D	SS840.S	Hex Head Set Screw M8 X 40 Zinc	2
E	SS820.S	Hex Head Set Screw M8 X 20 Zinc	2
F	SLS42T-F	Head Screw M6x30	4
H	SLS42T-H	Clevis Pin Ø9.5x20	2
I	SLS42T-I	Clevis Pin Ø6x30	2
J	SLS42T-J	Clevis Pin Ø8x40	2
K	SLS42T-K	Adjustable Pole Spacer	1
L	SLS42T-L	Big Flat Washer Ø8	8
M	FWM6.S	Flat Washer M6 Zinc	4
N	SLS42T-N	R-Pin Ø3	2
O	SLS42T-O	R-Pin Ø2	4
P	NLN6.S	Nyloc Nut M6 Zinc	16
Q	NLN8.S	Nyloc Nut M8 Zinc	12
--	SLS42T-R	Adjustable Pole Spacer (Not Shown)	1
--	SLS42T-S	Hitch spacer 25 x 23mm (Not Shown)	4

Note: It is our policy to continually improve products and as such we reserve the right to alter data, specifications and component parts without prior notice. See www.sealey.co.uk for the latest information.
Important: No liability is accepted for incorrect use of product. Spare parts must be fitted by a competent person.

Jack Sealey (EU) Ltd t/a Sealey Group Farney Street, Carrickmacross, Co. Monaghan, A81 PK68 Ireland
Jack Sealey Ltd t/a Sealey Group Kempson Way, Suffolk Business Park, Bury St Edmunds, Suffolk, IP32 7AR UK
Tel: 01284 757500 ▪ **Email:** sales@sealey.co.uk ▪ **Web:** www.sealey.co.uk

© Jack Sealey Limited