SEALEY

THE TOOL COMPANY

PARTS INFORMATION

Hydraulic Floor Type Press 20 Tonne

Model No. YK20ECF.V3

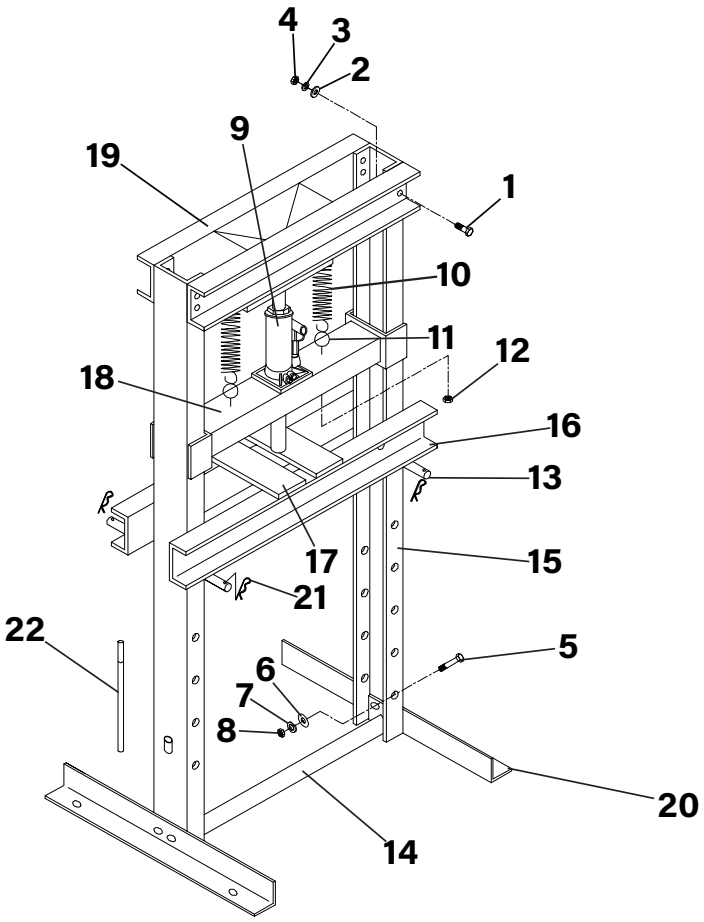

Item	Part No.	Description	Qty
1	YK20ECF-V3-01	Hex Head Bolt M16 x 35mm	8
2	FWM16.S	Flat Washer M16 Zinc	8
3	SWM16.S	Spring Washer M16 Zinc	8
4	SN16.S	Steel Nut M16 Zinc	8
5	YK20ECF-V3-05	Hex Head Bolt M12 x 35mm	4
6	FWM12.S	Flat Washer M12 Zinc	4
7	SWM12.S	Spring Washer M12 Zinc	4
8	SN12.S	Steel Nut M12 Zinc	4
9	YK20ECF-V3-09	Hydraulic Unit	1
10	YK20ECF-V3-10	Press Spring	2
11	YK20ECF-V3-11	Hook Pin	2

Item	Part No.	Description	Qty
12	SN8.S	Steel Nut M8 Zinc	2
13	YK20ECF-V3-13	Bed Frame Pin Ø25 x 250	2
14	YK20ECF-V3-14	Spreader Bar	1
15	YK20ECF-V3-15	Frame Upright	2
16	YK20ECF-V3-16	Table Platform	1
17	YK20ECF-V3-17	Arbor Plate	2
18	YK20ECF-V3-18	Cross Beam Base	1
19	YK20ECF-V3-19	Upper Cross Beam	1
20	YK20ECF-V3-20	Base Support	2
21	YK20ECF-V3-21	B-Pin	4
22	PH20-V5-I	Pumping Handle, Red (c/w Grip) Ø21mm x 548mm (Round Slotted Ø16mm)	1

Note: It is our policy to continually improve products and as such we reserve the right to alter data, specifications and component parts without prior notice. See www.sealey.co.uk for the latest information.
Important: No liability is accepted for incorrect use of product. Spare parts must be fitted by a competent person.

Jack Sealey (EU) Ltd t/a Sealey Group Farney Street, Carrickmacross, Co. Monaghan, A81 PK68 Ireland
Jack Sealey Ltd t/a Sealey Group Kempson Way, Suffolk Business Park, Bury St Edmunds, Suffolk, IP32 7AR UK
Tel: 01284 757500 ▪ **Email:** sales@sealey.co.uk ▪ **Web:** www.sealey.co.uk

© Jack Sealey Limited