SEALEY
THE TOOL COMPANY

Hydraulic Floor Type Press 30 Tonne

Model No. YK30ECF

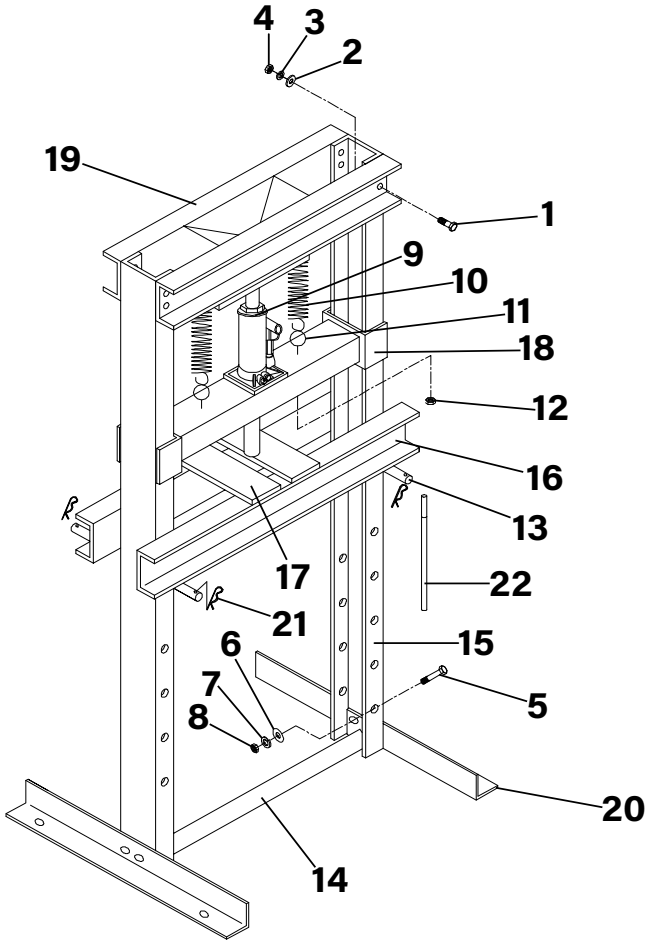

Item	Part No.	Description	Qty
1	SS1635.S	Hex Head Set Screw M16 x 35mm Zinc	8
2	FWM16.S	Flat Washer M16 Zinc	8
3	SWM16.S	Spring Washer M16 Zinc	8
4	SN16.S	Steel Nut M16 Zinc	8
5	SS1235.S	Hex Head Set Screw M12 x 35mm Zinc	4
6	FWM12.S	Flat Washer M12 Zinc	4
7	SWM12.S	Spring Washer M12 Zinc	4
8	SN12.S	Steel Nut M12 Zinc	4
9	YK30ECF-09	Hydraulic Unit	1
10	YK30ECF-10	Spring	2
11	YK30ECF-11	Hook Pin	2

Item	Part No.	Description	Qty
12	SN8.S	Steel Nut M8 Zinc	2
13	YK30ECF-13	Pin, Table Support Ø28 x 250mm	2
14	YK30ECF-14	Base Support	1
15	YK30ECF-15	Upright	2
16	YK30ECF-16	Table	2
17	YK30ECF-17	Arbor Plate	2
18	YK30ECF-18	Support Plate	1
19	YK30ECF-19	Upper Support	1
20	YK30ECF-20	Base Section	2
21	YK30ECF-21	Pin	4
22	PBS99/10V2.15	Handle	1

Note: It is our policy to continually improve products and as such we reserve the right to alter data, specifications and component parts without prior notice. See www.sealey.co.uk for the latest information.
Important: No liability is accepted for incorrect use of product. Spare parts must be fitted by a competent person.

Jack Sealey (EU) Ltd t/a Sealey Group Farney Street, Carrickmacross, Co. Monaghan, A81 PK68 Ireland
Jack Sealey Ltd t/a Sealey Group Kempson Way, Suffolk Business Park, Bury St Edmunds, Suffolk, IP32 7AR UK
Tel: 01284 757500 ▪ **Email:** sales@sealey.co.uk ▪ **Web:** www.sealey.co.uk

© Jack Sealey Limited