THE TOOL COMPANY

Superline PRO® Black Edition 860mm Rubber Wood Worktop for Modular Corner Cabinet

OPERATOR INSTRUCTION MANUAL

Model No.

APMS30CW

Important: Please read these instructions carefully. Note the safe operational requirements, warnings & cautions. Use the product correctly and with care for the purpose for which it is intended. Failure to do so may cause damage and/or personal injury and will invalidate the warranty. Keep these instructions safe for future use.

© Jack Sealey Limited

Table of Contents

1.	**Introduction**	**2**
1.1	Intended Use	2
1.2	Description	2
2.	**Safety Symbols**	**3**
3.	**Safety**	**3**
4.	**Specification**	**3**
5.	**Assembly**	**4**
6.	**Consumables & Accessories**	**5**
7.	**Maintenance**	**5**
8.	**Warranty**	**5**
9.	**Aftersales Support**	**5**

1. Introduction

Thank you for purchasing a Sealey product. Manufactured to a high standard, this product will, if used according to these instructions, and properly maintained, give you years of trouble free performance.

1.1 Intended Use

The Superline PRO® Black Edition Rubber Wood Worktop for Modular Corner Cabinet is designed to provide a durable work surface for use with the Superline PRO® Black Edition Modular Corner Cabinet. It is intended for indoor use in garages, workshops, and commercial workspaces as part of the Superline PRO® modular storage system.

1.2 Description

Rubber wood worktop for use with Model No. APMS42BE Corner Cabinet.

© Jack Sealey Limited

All content in this manual, including but not limited to text, images, graphics and logos is the property of Jack Sealey Ltd. or its licensors and is protected by copyright, trademark, and other intellectual property laws. You may not reproduce, distribute, modify, or otherwise use any content without prior written consent.

Disclaimer: All errors and omissions excluded. It is our policy to continually improve products and as such we reserve the right to alter data, specifications and component parts without prior notice. See **www.sealey.co.uk** for the latest information.

Country of origin: China.

2. Safety Symbols

Refer to instruction manual

Wear protective gloves

3. Safety

! **WARNING!** Read and understand these instructions before assembly and use.

- This product is intended for indoor use only.
- For ease of assembling, it is recommended that two persons assist each other.
- Read and understand all instructions before assembly and use.
- Wear suitable safety equipment during assembly.
- Ensure the worktop is securely fitted before use.

⃠ **DO NOT** exceed the maximum load capacity of the supporting cabinet.

- Always distribute loads evenly across the worktop surface.

⃠ **DO NOT** stand, sit, or climb on the worktop. Keep hands and fingers clear of pinch points during assembly.

⃠ **DO NOT** use the worktop if it is damaged or incorrectly installed.

- Use caution when handling the rubber wood worktop.
- Inspect all fixings periodically and tighten if necessary.
- Keep children away during assembly and installation.
- This product is intended for indoor use only.

4. Specification

Model No:	**APMS30CW**
Overall Size (W x D x H):	860 x 860 x 38mm

© Jack Sealey Limited

5. Assembly

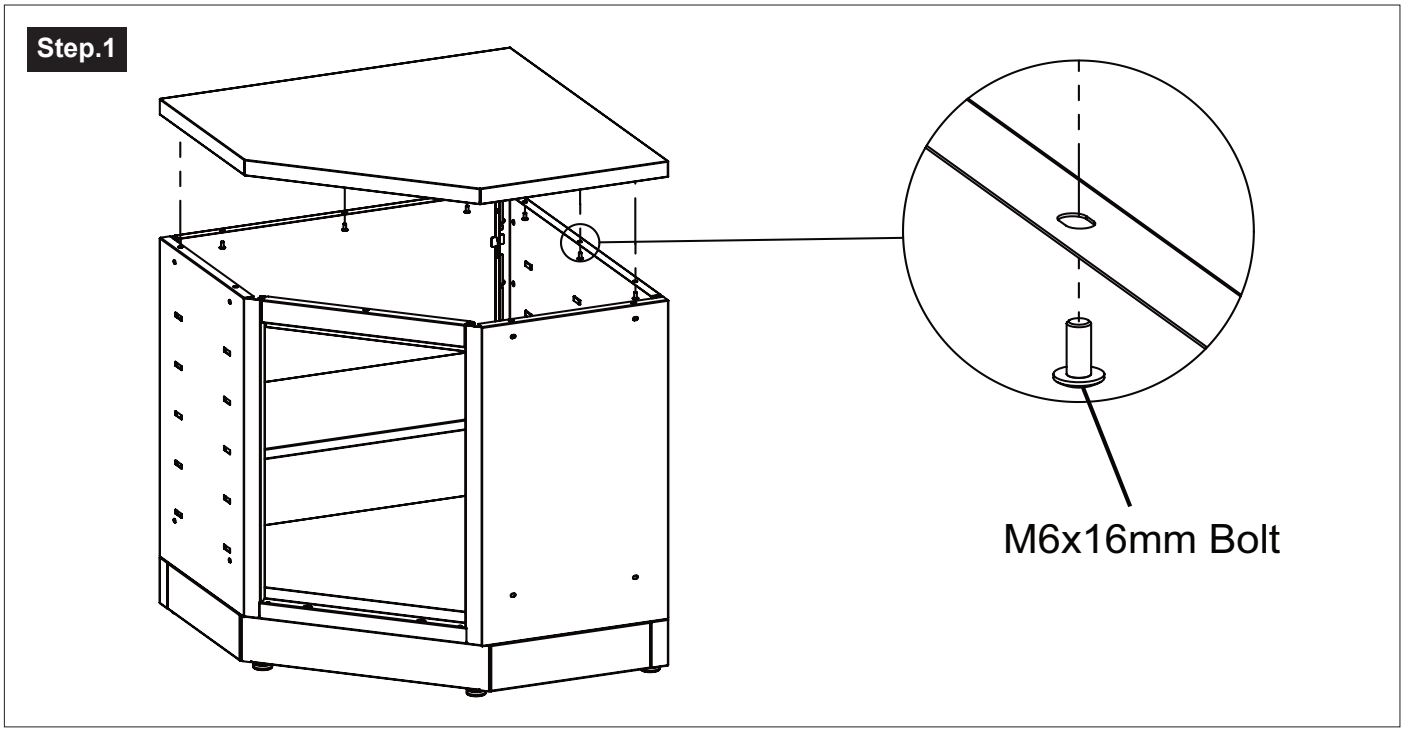

6. Consumables & Accessories

A wide range of consumables and accessories are available.

Visit www.sealey.co.uk to explore our extensive range.

7. Maintenance

- Periodically inspect all fixings and tighten if necessary.
- Periodically inspect all fixings and tighten if necessary.
- Clean the rubber wood surface with a soft cloth and mild detergent.

DO NOT use abrasive cleaners, scouring pads, or corrosive chemicals.

- Wipe up spills promptly to help maintain the finish.
- Dry the worktop after cleaning to prevent watermarks.
- Regularly inspect the worktop and supporting cabinet for signs of damage or wear.
- Replace any damaged parts before further use.

DO NOT exceed the recommended load capacity of the supporting cabinet.

- Keep the worktop clean and free from debris to maintain safe operation.

8. Warranty

- Guarantee is 60 months from purchase date, proof of which is required for any claim.

Please note that guarantee claims must be made via the place of purchase where you may need to provide proof of purchase. All consumable items are under no warranty period. All warranties exclude general wear and tear and misuse, see our terms of business for more details.

9. Aftersales Support

We are committed to supporting our products throughout their lifetime.

- If your product is outside of the warranty period, we offer an extensive range of spare parts along with expert technical advice to help keep your equipment in working order.
- Our technical team is on hand to assist 8.30am-5.00pm Mon-Fri with fault finding, repairs and general product queries.

  Telephone 01284 757505

  Email: technical@sealey.co.uk

If required, products can also be returned to Sealey or one of our authorised repair agents for inspection, servicing or repair at a reasonable cost.

Product Registration

It's quick and easy to register your warranty online at www.sealey.co.uk. Just log in or create a free MySealey account, then head to the 'My Products' section to fill out the short warranty registration form. If your product is advertised with a free extended warranty upon registration, this will activate your extended warranty.

Environment Protection

Recycle unwanted materials instead of disposing of them as waste. All tools, accessories and packaging should be sorted, taken to a recycling centre and disposed of in a manner which is compatible with the environment. When the product becomes completely unserviceable and requires disposal, drain any fluids (if applicable) into approved containers and dispose of the product and fluids according to local regulations.

Jack Sealey (EU) Ltd t/a Sealey Group Farney Street, Carrickmacross, Co. Monaghan, A81 PK68 Ireland
Jack Sealey Ltd t/a Sealey Group Kempson Way, Suffolk Business Park, Bury St Edmunds, Suffolk, IP32 7AR UK
Tel: 01284 757500 ▪ **Email:** sales@sealey.co.uk ▪ **Web:** www.sealey.co.uk

© Jack Sealey Limited